Lexium MDrive Ethernet TCP/IP products

LMDxE/N57 and LMDxE/N85

Product hardware manual

V1.00, 04.2015



EtherNet/IP™ Modbus PROFINET®

CE RoHS REACH

Applicable to:

LMDOE57x	*LMDON57x*
LMDOE85x	*LMDON85x*
LMDCE57x	*LMDCN57x*
LMDCE85x	*LMDCN85x*

Schneider Electric

Lexium MDrive TCP/IP products Manual		
Date	**Revision**	**Changes**
07/31/2013	V1.00, 07.2013	Initial release
01/14/2014	V1.00, 01.2014	Added CE and RoHS certification date. Added information on tamper seal/ Various updates throughout.
08/13/2014	V1.00, 08.2014	Corrected max step frequency from 5 MHz to 2.56 MHz. minor adjustments to dimensioned drawings.
04/02/2015	V1.00, 04.2015	Added addition I/O connection examples to Section 6: Installation. Added subsection on using a single system earthing point to Section 5: Engineering.

Important information

This manual is part of the product.

Carefully read this manual and observe all instructions.

Keep this manual for future reference.

Hand this manual and all other pertinent product documentation over to all users of the product.

Carefully read and observe all safety instructions and the chapter “Before you begin - safety information”.

Some products are not available in all countries.

Please consult the latest catalog for information on the availability of products.

Subject to technical modifications without notice.

All details provided are technical data which do not constitute warranted qualities.

Most of the product designations are registered trademarks of their respective owners, even if this is not explicitly indicated.

This page intentionally left blank

Table of Contents

Important information ... 3

Writing conventions and symbols ... 1

1 Introduction ... 3
1.1 About this manual ... 3
1.2 Unit overview ... 3
1.2.1 Lexium MDrive TCP/IP protocols ... 3
1.3 Components and interfaces ... 5
1.3.1 Components ... 5
1.3.2 Interfaces ... 6
1.4 Name plate ... 7
1.5 Part number identification ... 8
1.6 Documentation and literature references ... 8

2 Before you begin - safety information ... 9
2.1 Qualification of personnel ... 9
2.2 Intended use ... 9
2.3 Hazard categories ... 10
2.4 Basic information ... 11
2.5 Standards and terminology ... 13

3 Technical data ... 15
3.1 Certifications ... 15
3.2 Environmental conditions ... 15
3.3 Mechanical data ... 16
3.3.1 Degree of protection ... 16
3.3.2 Mounting ... 17
3.3.3 NEMA 23 (57 mm) dimensions ... 19
3.3.4 NEMA 34 (85 mm) dimensions ... 20
3.4 Electrical data ... 21
3.4.1 Supply voltage VDC at P1 ... 21
3.4.2 Multifunction interface at P2 a & b ... 22
3.4.3 Ethernet interface at P3 ... 23
3.4.4 LED indicators ... 23
3.5 Motor data ... 25
3.5.1 LMD•57 (NEMA 23) specifications ... 25
3.5.2 LMD•57 (NEMA 23) performance ... 25
3.5.3 LMD•85 (NEMA 34) specifications ... 26
3.5.4 LMD•85 (NEMA 34) performance ... 26
3.6 Conditions for UL 508C ... 27

4 Basics ... 29
4.1 Functional safety ... 29
4.1.1 Working with IEC 61508 ... 29

5 Engineering ... 31
5.1 External power supply units ... 31
5.1.1 Supply voltage +VDC ... 32
5.1.2 Auxiliary power supply ... 35
5.1.3 Wiring and shielding ... 35
5.2 Ground design ... 37
5.2.3 Protective earth ... 38
5.3 Monitoring functions ... 38

6 Installation 39
6.1 Electromagnetic compatibility, EMC 40
6.2 Mechanical installation 41
6.3 Electrical installation 44
6.3.1 Overview of all connectors 45
6.3.2 Connection of the supply voltage VDC 45
6.3.3 Connection of the multifunction interface 49
6.3.4 Connection of the service interface 58
6.4 Checking wiring 58

7 Configuration 59
7.1 Preparing for Configuration 61
7.1.1 Installing the Lexium MDrive Software Suite 61

8 Operation 63
8.1 Basics 63
8.1.1 Overview 63
8.1.2 HMTechnology (HMT) 64
8.1.2 Overview of motor phase current 65
8.2 Software operation modes 66
8.2.1 Immediate (streaming command) mode (all protocols) 66
8.2.2 Program mode (MCode/TCP or MODBUS/TCP) 67
8.3 Operation by HMT modes 68
8.3.1 HMT off (bypass) (AS=0) 68
8.3.1 HMT on (fixed current) (AS=1) 69
8.3.2 HMT on (variable current) (AS=2) 70
8.3.3 HMT on (torque mode) (AS=3) 70
8.4 I/O operation 70
8.4.1 General purpose inputs 71
8.4.2 Power outputs 71
8.4.3 Analog input 72
8.4.3 Signal (Trip) output 72

9 Diagnostics and troubleshooting 73
9.1 Error indication and troubleshooting 73
9.1.1 Operation state and error indication 73
9.2 LED indicators 74
9.3 Error codes 75

10 Accessories and spare parts 77
10.1 Accessories 77

11 Service, maintenance and disposal 79
11.1 Service address 80
11.2 Maintenance 80
11.3 Replacing units 80
11.4 Shipping, storage, disposal 81

12 Glossary 83
12.1 Units and conversion tables 83
12.1.1 Length 83
12.1.2 Mass 83
12.1.3 Force 83
12.1.4 Power 84
12.1.5 Rotation 84
12.1.6 Torque 84
12.1.7 Moment of inertia 84
12.1.8 Temperature 84
12.1.9 Conductor cross section 85
12.2 Terms and Abbreviations 85

List of Figures

Figure 1.1: Components and Interfaces 5
Figure 1.2: Name plate 7
Figure 1.3: Part numbering 8
Figure 3.1: Mounting positions 17
Figure 3.2: NEMA 23 (57 mm) Mounting hole pattern 17
Figure 3.3: NEMA 34 (85 mm) Mounting hole pattern 18
Figure 3.4: LMD•57 dimensions [inches (mm)] 19
Figure 3.5: LMD•85 dimensions [inches (mm)] 20
Figure 3.6: Overview of connectors 21
Figure 3.7: LMD•57 torque-speed performance curves 25
Figure 3.8: LMD•85 torque-speed performance curves 26
Figure 5.1: DC power supply cabling under 50’ (15.24 m) 33
Figure 5.2: AC power to full wave bridge 34
Figure 5.3: AC power to DC supply 34
Figure 5.4: System power wiring 36
Figure 5.5: Earth connection best practices 38
Figure 6.1: Overview of connectors 45
Figure 6.2: Pin Assignment supply voltage 47
Figure 6.3: Connecting supply voltage VDC wiring 48
Figure 6.4: Multifunction interface pin assignments 49
Figure 6.5: Connecting multifunction interface wiring 50
Figure 6.6: Line driven input (sinking) 51
Figure 6.7: Line driven input (sourcing) 51
Figure 6.8: Open collector sinking 51
Figure 6.9: Open collector sourcing 51
Figure 6.10: Wiring example - mechanical switches 52
Figure 6.11: Wiring example - NPN sensors 53
Figure 6.12: Wiring example - PNP sensors 54
Figure 6.13: Output sinking configuration 55
Figure 6.14: Output sourcing configuration 55
Figure 6.15: Output wiring examples 56
Figure 6.16: Signal output 57
Figure 6.17: `ANALOG_IN` signal input 57
Figure 6.18: Analog input sample wiring 57
Figure 8.1: Control bounds for hMTechnology 64
Figure 8.2: Overview of motor phase current 65
Figure 8.3: Master-slave network architecture 66
Figure 8.4: Distributed control architecture 67
Figure 8.5: Motion block, HMT disabled 68
Figure 8.6: Block diagram, HMT enable (AS=1/2) 69

This page intentionally left blank

Writing conventions and symbols

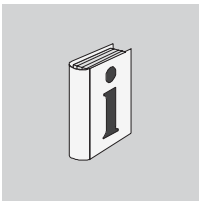

Work steps

If work steps must be performed consecutively, this sequence of steps is represented as follows:

- ■ Special prerequisites for the following work steps
- ▶ Step 1
- ◁ Specific response to this work step
- ▶ Step 2

If a response to a work step is indicated, this allows you to verify that the work step has been performed correctly.

Unless otherwise stated, the individual steps must be performed in the specified sequence.

Bulleted lists

The items in bulleted lists are sorted alphanumerical or by priority. Bulleted lists are structured as follows:

- Item 1 of bulleted list
- Item 2 of bulleted list
  - Subitem for 2
  - Subitem for 2
- Item 3 of bulleted list

Making work easier

Information on making work easier is highlighted by this symbol:



Sections highlighted this way provide supplementary information on making work easier.

Parameters

Parameters are shown as follows

```
RC      Motor Run Current
```

Units of measure

Measurements are given US units, metric values are given in SI units in parenthesis.

Examples”

1.00 in (25.4 mm)
100 oz-in (70 N-cm)

V1.00, 04.2015

Page intentionally left blank

1 Introduction

1

1.1 About this manual

This manual is valid for all Lexium MDrive TCP/IP products standard products. This chapter lists the type code for this product. The type code can be used to identify whether your product is a standard product or a customized model.

This manual covers the specifications and hardware installation of the following products:

- NEMA 23: LMDxE57x and LMDxN57x
- NEMA 34: LMDxE85x and LMDxN85x

If using the NEMA 17 (42 mm) Lexium MDrive TCP/IP product please refer to the hardware manual specific to that product

1.2 Unit overview

Lexium MDrive TCP/IP products consists of a stepper motor and integrated electronics. The product integrates an Ethernet TCP/IP interface, drive and control electronics and the power stage.

Lexium MDrive TCP/IP products (LMDxE) Available protocols are EtherNet/IP industrial protocol, MODBUS/TCP, MCode/TCP on a single device.

Lexium MDrive Profinet IO (LMDxN) The Lexium MDrive Profinet IO is a Profinet IO-device. MCode/TCP is also available on Port 503 for configuration or use as a programmable controller. Note that the device cannot be used in moth modes simultaneously.

All setup parameters are set via the fieldbus interface.

1.2.1 Lexium MDrive TCP/IP protocols

EtherNet/IP The Lexium MDrive Ethernet may be used as a fully ODVA compliant Adapter class device on EtherNet/IP networks.

MODBUS/TCP The Lexium MDrive Ethernet may be used in MODBUS/TCP networks, A standard open industrial convention supported by a variety of machine components such as programmable controllers, drives and controls, I/O modules and switches.

Profinet IO The Lexium MDrive Profinet may be used as an IO-DEVICE on Profinet networks with Siemens PLCs. Motion commands, variables and flags from the standard MCode control language are mapped to input and output registers of the device. There are 38 output registers and 34 input registers.

V1.00, 01.2014

MCode/TCP

The “Lexium MDrive TCP/IP products” is a fully programmable motion control system allowing for complex program and I/O interaction. Operating modes may be used interchangeably:

- **Immediate mode:** In immediate mode, also known as streaming commands, the device will respond to 1 and 2 character ASCII commands sent via the Ethernet interface
- **Program mode:** In program mode the device may be programmed with multiple functions, subroutines and process interactions using the MCode programming language, which is made up of 1 and 2 character ASCII mnemonics. Stored programs may be executed using an input, by labeling a program `SU` to run it on start up, or via an immediate mode command.

V1.00, 01.2014

1.3 Components and interfaces

NEMA 23 (57 mm) product shown below, the NEMA 34 (85 mm) has identical components and interfaces.

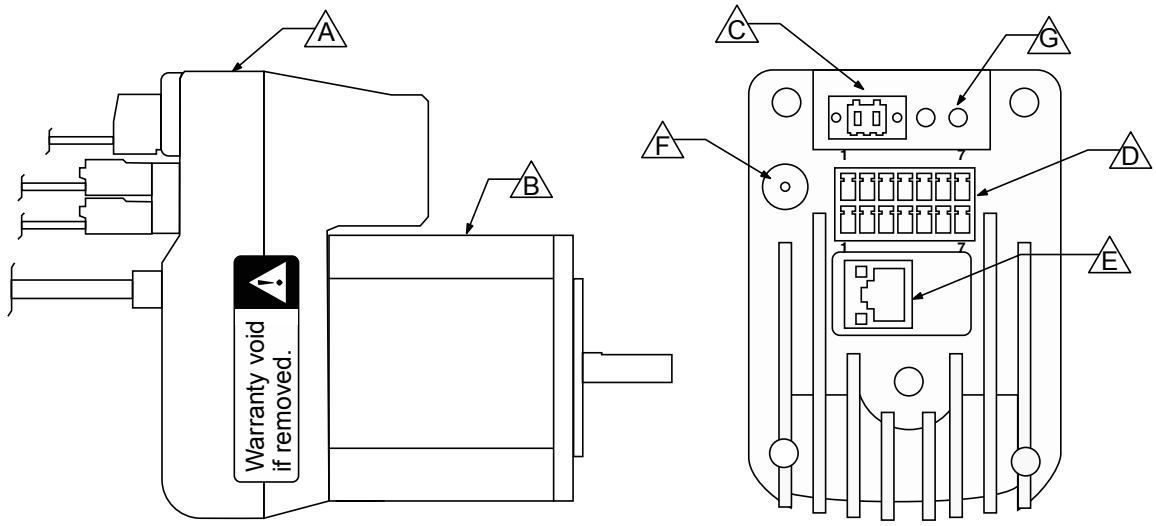

Figure 1.1: Components and Interfaces

(A) Electronics housing
(B) Two phase stepper motor
(C) DC power interface
(D) Multifunction interface
(E) Ethernet RJ45 interface
(F) Protective earth
(G) LED indicators

1.3.1 Components

Motor The motor is a two phase brushless stepper motor. The motor has a high torque density due to the use of the latest magnetic materials and enhanced design. The step angle of the motor is 1.8°.

Electronics housing The electronics system is comprised of control electronics and power stage.

The drive system is controlled by streaming commands via the service interface, embedded programming, or by pulse and direction input signals.

1.3.2 Interfaces

Standard available interfaces.

DC power supply voltage

The supply voltage VDC supplies the drive and control electronics and the power stage.



The ground connections of all interfaces are galvanically connected. For more information see chapter 5.2 “Ground design”. This chapter also provides information on protection against reverse polarity.

Multifunction interface

The multifunction interface operates at the following signal levels:

- 12 to 24V Aux-Power input to supply power to logic circuits in the event of main supply loss.
- 24V input signals are opto-isolated
- 24V output signals are opto-isolated and current limited
- 0 to 10V analog signal is not isolated

The 24V input signals are programmable as general purpose or to predefined functions. Input 1 also has alternate high speed function of being configured as a capture input.

Two 24V output signals are programmable as general purpose or to a set of predefined functions. One output is special function as a high speed trip output.

The reference voltage or current is applied to the analog input can be used for a number of programmatically defined operations.

Ethernet interface

The service interface provides a connection to an Ethernet network.

A The commissioning software may then be used to configure the device IP address and subnet mask.

The Ethernet interface is also used for firmware upgrades.

Protective earth

Protective earth provides a means of grounding to the device chassis.

1.4 Name plate

The name plate has the following information

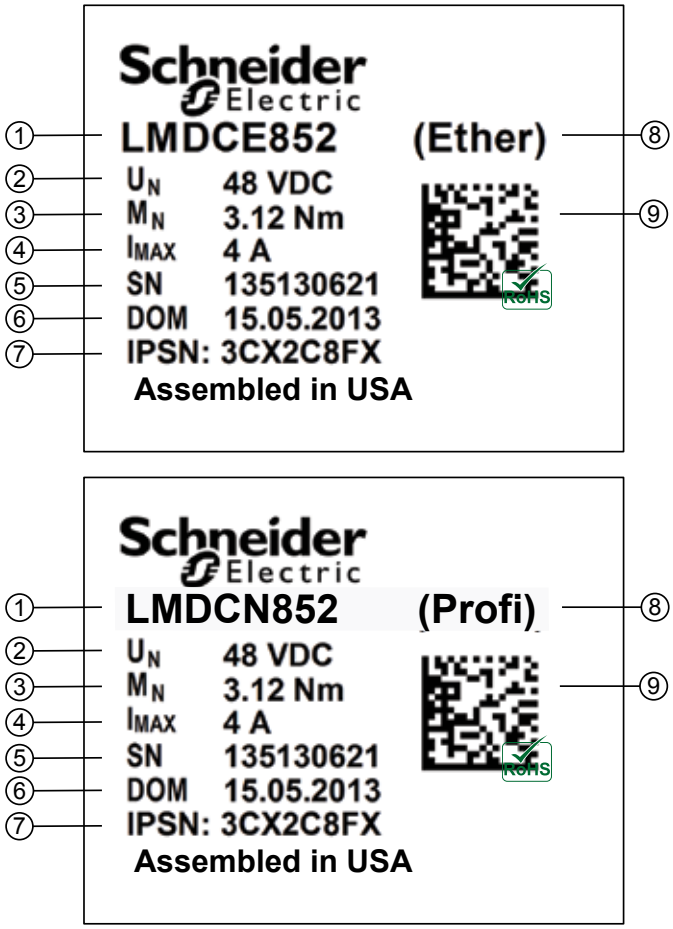

Figure 1.2: Name plate

(1) Part number
(2) Max. voltage
(3) Max. Holding torque
(4) Maximum required power supply current
(5) Serial number
(6) Date of manufacture
(7) Ethernet MAC address
(8) Communication interface
- (Ether): Ethernet/IP, MODBUS/TCP
- (Profi): Profinet IO

(9) Datamatrix code

1.5 Part number identification

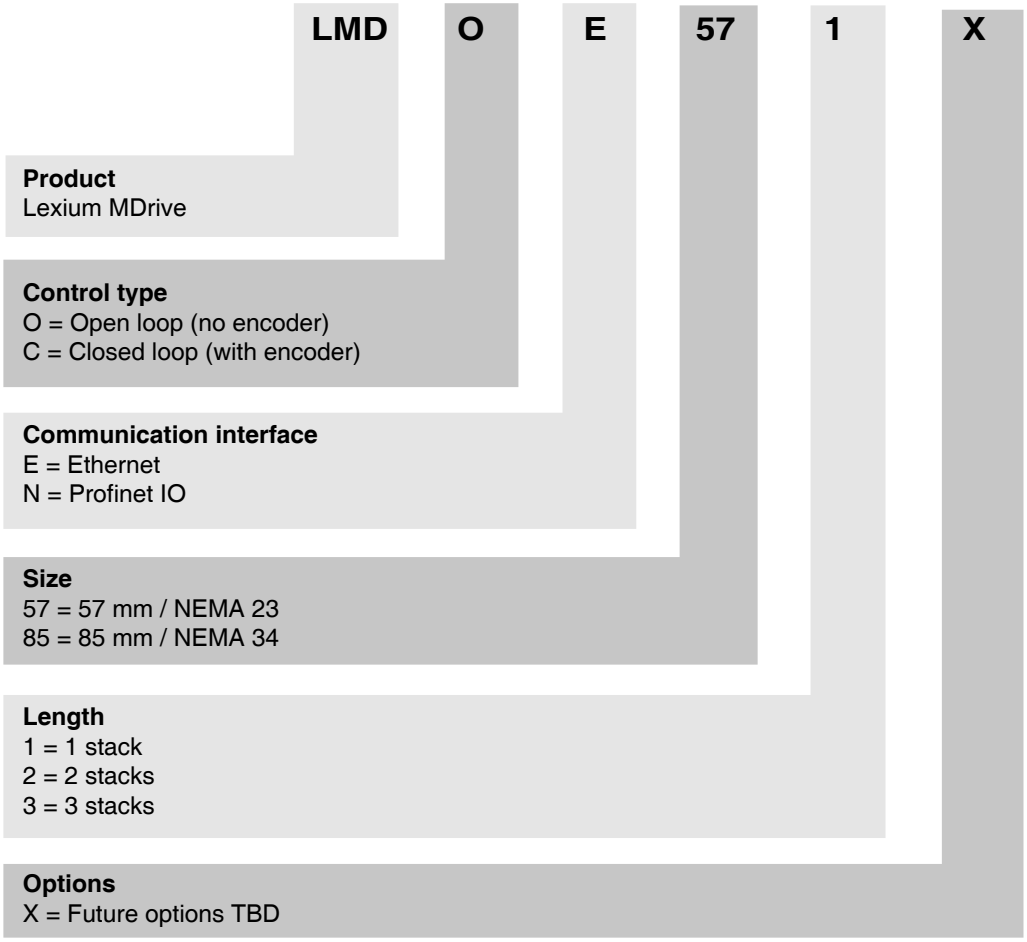

Figure 1.3: Part numbering

1.6 Documentation and literature references

This document should be used in conjunction with the following documents:

- EtherNet/IP Fieldbus manual
- MODBUS/TCP Fieldbus Manual
- Profinet IO Fieldbus Manual
- MCode Programming and Reference Manual
- Lexium MDrive Software Suite Manual

Source product manuals

The current product manuals are available for download from the Internet.

http://motion.schneider-electric.com

2 Before you begin - safety information

2

The information provided in this manual supplements the product manual. Carefully read the product manual before using the product.

2.1 Qualification of personnel

Only appropriately trained persons who are familiar with and understand the contents of this manual and all other pertinent product documentation are authorized to work on and with this product. In addition, these persons must have received safety training to recognize and avoid hazards involved. These persons must have sufficient technical training, knowledge and experience and be able to foresee and detect potential hazards that may be caused by using the product, by changing the settings and by the mechanical, electrical and electronic equipment of the entire system in which the product is used.

All persons working on and with the product must be fully familiar with all applicable standards, directives, and accident prevention regulations when performing such work.

2.2 Intended use

This product is a motor with an integrated drive and intended for industrial use according to this manual.

The product may only be used in compliance with all applicable safety regulations and directives, the specified requirements and the technical data.

Prior to using the product, you must perform a risk assessment in view of the planned application. Based on the results, the appropriate safety measures must be implemented.

Since the product is used as a component in an entire system, you must ensure the safety of persons by means of the design of this entire system (for example, machine design).

Operate the product only with the specified cables and accessories. Use only genuine accessories and spare parts. The product must NEVER be operated in explosive atmospheres (hazardous locations, Ex areas).

Any use other than the use explicitly permitted is prohibited and can result in hazards.

Electrical equipment should be installed, operated, serviced, and maintained only by qualified personnel.

V1.00, 04.2015

2.3 Hazard categories

Safety instructions to the user are highlighted by safety alert symbols in the manual. In addition, labels with symbols and/or instructions are attached to the product that alert you to potential hazards.

Depending on the seriousness of the hazard, the safety instructions are divided into 4 hazard categories.

⚠ DANGER

DANGER indicates an imminently hazardous situation, which, if not avoided, will result in death or serious injury.

⚠ WARNING

WARNING indicates a potentially hazardous situation, which, if not avoided, **can result** in death, serious injury, or equipment damage.

⚠ CAUTION

CAUTION indicates a potentially hazardous situation, which, if not avoided, **can result** in injury or equipment damage.

CAUTION

CAUTION used without the safety alert symbol, is used to address practices not related to personal injury (e.g. **can result** in equipment damage).

2.4 Basic information

⚠ DANGER

UNINTENDED CONSEQUENCES OF EQUIPMENT OPERATION

When the system is started, the drives are usually out of the operator's view and cannot be visually monitored.

- Only start the system if there are no persons in the hazardous area.

Failure to follow these instructions will result in death or serious injury.

⚠ WARNING

UNEXPECTED MOVEMENT

Drives may perform unexpected movements because of incorrect wiring, incorrect settings, incorrect data or other errors.

Interference (EMC) may cause unpredictable responses in the system.

- Carefully install the wiring in accordance with the EMC requirements.
- Ensure the `BRIDGE ENABLE` input is inactive to avoid an unexpected restart of the motor before switching on and configuring the drive system.
- Do NOT operate the drive system with unknown settings or data.
- Perform a comprehensive commissioning test.

Failure to follow these instructions can result in death or serious injury.

⚠WARNING

LOSS OF CONTROL

- The designer of any control scheme must consider the potential failure modes of control paths and, for certain critical functions, provide a means to achieve a safe state during and after a path failure. Examples of critical control functions are emergency stop, overtravel stop, power outage and restart.
- Separate or redundant control paths must be provided for critical functions.
- System control paths may include communication links. Consideration must be given to the implication of unanticipated transmission delays or failures of the link.
- Observe all accident prevention regulations and local safety guidelines. 1)
- Each implementation of the product must be individually and thoroughly tested for proper operation before being placed into service.

Failure to follow these instructions can result in death or serious injury.

1) For USA: Additional information, refer to NEMA ICS 1.1 (latest edition), “Safety Guidelines for the Application, Installation, and Maintenance of Solid State Control” and to NEMA ICS 7.1 (latest edition), “Safety Standards for Construction and Guide for Selection, Installation and Operation of Adjustable-Speed Drive Systems”.

⚠CAUTION

UNEXPECTED BEHAVIOR AND DESTRUCTION OF SYSTEM COMPONENTS

When you work on the wiring and when you unplug or plug in connectors, this may cause unexpected behavior and destruction of system components.

- Switch the power supply off before working on the wiring.

Failure to follow these instructions can result in injury or equipment damage.

V1.00, 04.2015

⚠CAUTION

TAMPER SEAL

Opening Lexium MDrive heat sinks can affect factory-set encoder alignment and impact hMTechnology performance. Tamper seals are to ensure factory hardware settings remain unaltered and match the encoder alignment set during the manufacturing process. If a seal is broken, the LMD product warranty is void.

- If experiencing faulty or erratic operation, contact the factory for support.

Failure to follow these instructions can result in injury or equipment damage.

2.5 Standards and terminology

Technical terms, terminology and the corresponding descriptions in this manual are intended to use the terms or definitions of the pertinent standards.

In the area of drive systems, this includes, but is not limited to, terms such as “safety function”, “safe state”, “fault”, “fault reset”, “failure”, “error”, “error message”, “warning”, “warning message”, etc.

Among others, these standards include:

- IEC 61800 series: “Adjustable speed electrical power drive systems”
- IEC 61800-7 series: “Adjustable speed electrical power drive systems - Part 7-1: Generic interface and use of profiles for power drive systems - Interface definition”
- IEC 61158 series: “Industrial communication networks - Fieldbus specifications”
- IEC 61784 series: “Industrial communication networks - Profiles”
- IEC 61508 series: “Functional safety of electrical/electronic/programmable electronic safety-related systems”

V1.00, 04.2015

Page intentionally left blank

3 Technical data

3

This chapter contains information on the ambient conditions and on the mechanical and electrical properties of the device family and the accessories.

3.1 Certifications

Product certifications:

Certification	Regulation #	Validity
RoHS	2011/65/EU	12/30/2013
EMC	2004/108/EC	12/30/2013
REACH	EC 1907/2006	12/19/2012

3.2 Environmental conditions

Ambient operating conditions

The maximum permissible ambient temperature during operation depends on the distance between the devices and the required power. Observe the pertinent instructions in the chapter Installation.

The following relative humidity is permissible during operation.

Operating temperature [1)]	[°C]	-20 ... 50 (no icing)
Temperature variation	[°C/min]	0.5
Humidity	[%]	5 ... 95 (non-condensing)

1) If the product is to be used in compliance with UL 508C, note the information provided in chapter 3.6 “Conditions for UL 508C”.

Ambient conditions: transportation and storage

The environment during transport and storage must be dry and free from dust. The maximum vibration and shock load must be within the specified limits.

Temperature	[°C]	-25 ... 70
Temperature variation	[°C]	-25 ... 30
Humidity	[%]	5 ... 95 (non-condensing)

Maximum operating temperatures

Power stage [1]	[°C]	85
Motor [2]	[°C]	100

1) May be read via parameter
2) Measured on the surface

Installation altitude

The installation altitude is defined as height above sea level

Installation altitude [3]	[ft (m)]	3280 (1000)

3) Installation above 3280 (1000) may require derating output current and maximum ambient temperature.

Vibration and shock

Vibration, sinusoidal	m/s^2	10	IEC 60721-3-2
Shock, non-sinusoidal	m/s^2	100	IEC 60721-3-2

EMC

Emission	EIC61800-3 (Category C2)
Noise immunity	IEC61000-6-2

3.3 Mechanical data

3.3.1 Degree of protection

IP degree of protection

The product has the following IP degree of protection as per EN 60529.

Degree of protection	IP20

The total degree of protection is determined by the component with the lowest degree of protection.

IP degrees of protection overview

First digit		**Second digit**	
Protection against intrusion of objects		**Protection against intrusion of water**	
0	No protection	0	No protection
1	External objects >50 mm	1	Vertically falling dripping water
2	External objects >12 mm	2	Dripping water falling at an angle (75 ° ... 90 °)
3	External objects >2.5 mm	3	Spraying water
4	External objects >1 mm	4	Splashing water
5	Dust-protected	5	Water jets
6	Dust-tight	6	Heavy sea
		7	Immersion
		8	Submersion

3.3.2 Mounting

CAUTION

AXIAL AND RADIAL LOADING OF THE SHAFT

Mounting of the load to the shaft must be done with regard to the radial and axial load limits of the motor

Failure to follow these instructions can result in equipment damage.

The following mounting positions are defined and approved as per EN 60034-7:

- IM B5 drive shaft horizontal
- IM V1 drive shaft vertical, shaft end down
- IM V3 drive shaft vertical, shaft end up

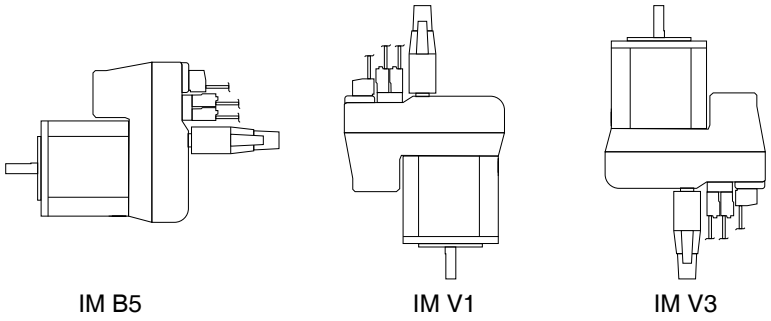

Figure 3.1: Mounting positions

NEMA 23 (57 mm) Mounting holes

Mounting the LMDXX57X uses four (4) M5 x 0.5 screws on a bolt circle diameter (BCD) of 2.624” (66.61 mm). The length of the screws will be determined by the thickness of the mounting material plus 0.186” (4.7 mm) motor mounting flange thickness.

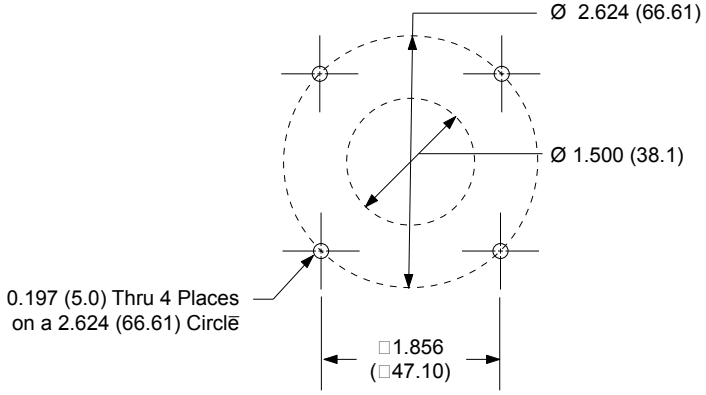

Figure 3.2: NEMA 23 (57 mm) Mounting hole pattern (not to scale)

NEMA 34 (85mm) Mounting holes

Mounting the LMDXX85X uses four (4) M5 x 0.8 screws on a bolt circle diameter (BCD) of 3.873” (98.39 mm). The length of the screws will be determined by the thickness of the mounting material plus 0.0420” (10.6 mm) motor mounting flange thickness.

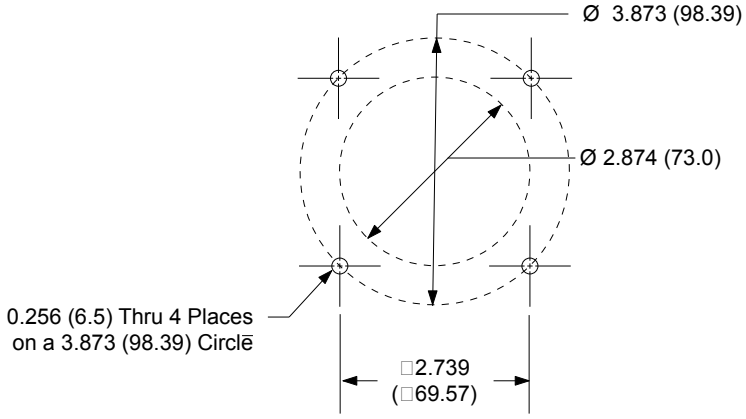

Figure 3.3: NEMA 34 (85 mm) Mounting hole pattern (not to scale)

3.3.3 NEMA 23 (57 mm) dimensions

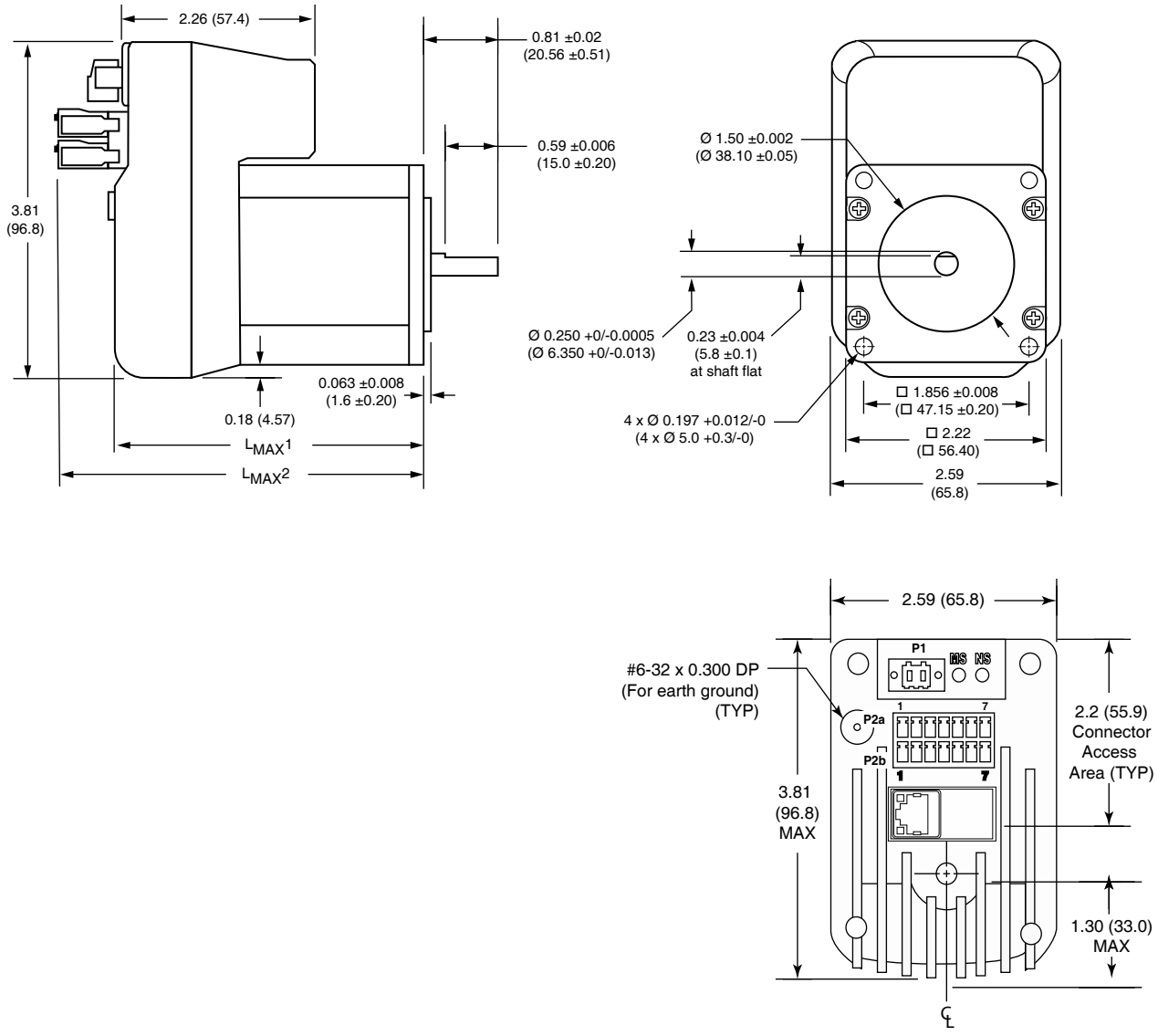

		$L_{MAX}1$	$L_{MAX}2$
LMD•571	in (mm)	3.17 (80.5)	3.91 (99.3)
LMD•572	in (mm)	3.52 (89.4)	4.26 (108.2)
LMD•573	in (mm)	4.38 (111.3)	5.13 (130.3)

Figure 3.4: LMD•57 dimensions [inches (mm)]

3.3.4 NEMA 34 (85 mm) dimensions

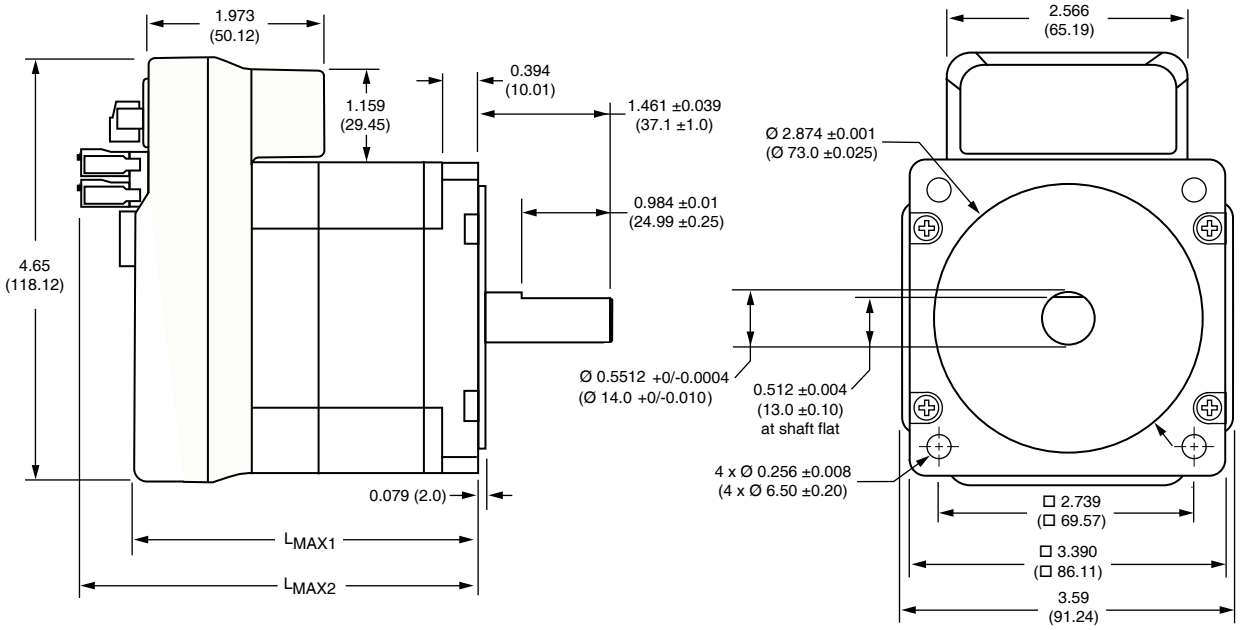

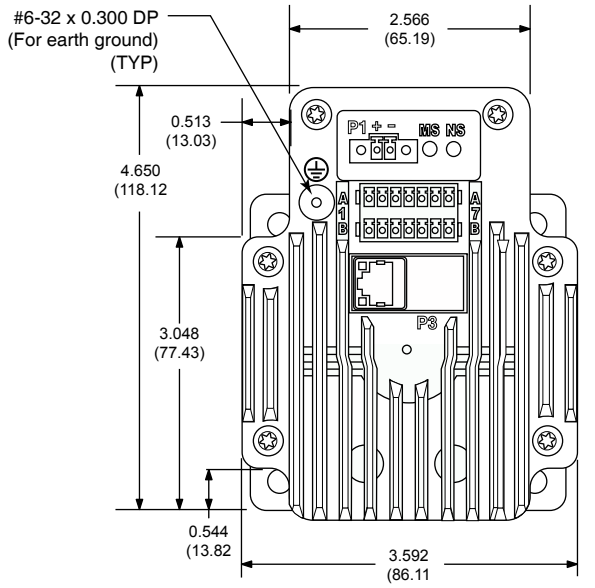

	$L_{MAX}1$	$L_{MAX}2$
LMD•851	3.76 (95.5)	4.41 (112.0))
LMD•852	4.33 (110.0))	4.98 (126.5)
LMD•853	5.90 (149.9)	6.55 (166.4)

Figure 3.5: LMD•85 dimensions [inches (mm)]

3.4 Electrical data

Overview of connectors

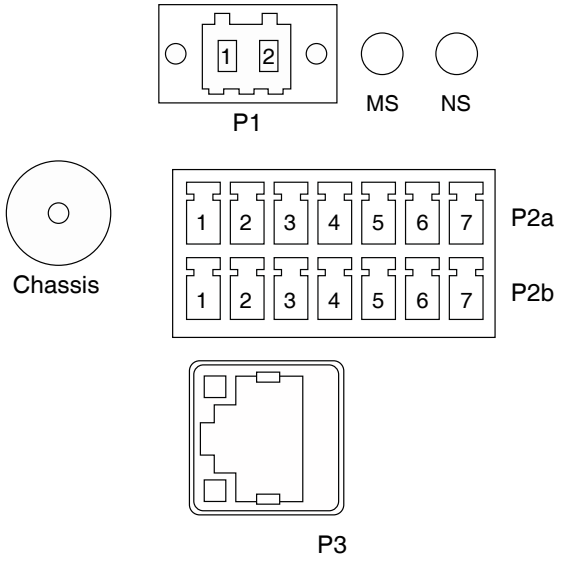

Figure 3.6: Overview of connectors

3.4.1 Supply voltage VDC at P1

		LDM•57	LDM•85
Nominal voltage [1), 2)]	[$+V_{dc}$]	24/48	24/48
Limit values min/max [1), 2)]	[$+V_{dc}$]	12/60	12/70
Ripple at nominal voltage	[$+V_{pp}$]	4.8	4.8
Max. current input	[A]	3.5	4.0

1) UL 508C rating to 48VDC, posted max ratings conforms to CE low voltage directive.
2) The actual power requirement is often significantly lower, because the maximum possible motor torque is usually not required for operation of a system.

3.4.2 Multifunction interface at P2 a & b

Signal inputs

The signal input functions are programmable in function. They may be used as sinking or sourcing based upon the bias of the `INPUT_REFERENCE`

Voltage range	[+V_{dc}]	5 ... 24
input current (5V)	[mA]	8.7
Input current (24V)	[mA]	14.6
Input frequency	[kHz]	5
Isolation		Galvanic
Protection class		III

Analog input

Voltage mode 0 - 5	[V_{dc}]	0 ... 5
Voltage mode 0 - 10	[V_{dc}]	0 ... 10
Current loop mode	[mA]	0 ... 20
Resolution	[Bits]	10
Impedance by mode		
0 - 5 V	[MΩ]	5
0 - 10 V	[kΩ]	1.25
0 - 20 mA	[Ω]	5
Isolation		None

*Power outputs**

Voltage rating	[V_{dc}]	-24 ... +24
Current rating	[mA]	-100 ... +100
RDS_{ON}	[Ω]	11 ... 14
T_{ON} (hardware)	[mS]	0.08 ... 2
T_{OFF} (hardware)	[mS]	0.03 ... 0.5
O/C Level (±)	[mA]	230 ... 350
S/C Peak (+ or - @24V)	[mA]	2.2 (max)
Clamp voltage	[V_{dc}]	32 ... 38

Signal output

Voltage open-collector	[V_{dc}]	60
Voltage open-emitter	[V_{dc}]	7
Current open-collector	[mA]	5.5
Current open-emitter	[mA]	5.5
Isolation		Galvanic

Auxiliary supply voltage VDC

Aux power is used to maintain power to the logic circuits and retain information stored in counters, registers and user variable in the event of system power loss. It is not a required connection.

Limit values min/max	[+V_{dc}]	12/48
Ripple at nominal voltage	[+V_{pp}]	
Max. current input	[mA]	194

3.4.3 Ethernet interface at P3

RJ45

Standard RJ45 connector for CAT5/6 cabling capable of 10/100 network speeds. TCP/IP settings are modified using the TCP/IP Configuration Utility. See the Lexium MDrive Software Suite Manual.

TCP/IP settings		
Default IP	[IPv4]	192.168.33.1
Subnet mask		255.255.255.0

3.4.4 LED indicators

The Lexium MDrive TCP/IP product LED's will function differently by protocol.

EtherNet/IP

Color	State	Description
NS – Network status		
None	Off	No power, no Ethernet connection
Red	Solid	Unrecoverable fault
	Flashing	I/O connection timed out
Green	Solid	Normal runtime operation (I/O connection allocated)
	Flashing	Device is idle or not allocated to a client (PLC)
Red/green	Alternating	Power-up self test in progress
MS – Module Status		
None	Off	No power
Red	Solid	Unrecoverable fault
	Flashing	Minor, recoverable fault
Green	Solid	I/O connection established
	Flashing	Standby, no I/O connection established
Red/green	Alternating	Power-up self test in progress

Profinet-IO

Color	State	Description
NS – Network Status		
None	Off	No power
Green	Solid	Valid Profinet connection exists
	Flashing	Device never connected
Red	Solid	Profinet stack failure
	Flashing	Profinet connection lost/disconnected
MS – Module Status		
None	Off	No power
Red	Solid	Unrecoverable fault - drive not responding
	Flashing	Minor, recoverable fault
Green	Solid	Device operational
	Flashing	Drive fault/failure, in firmware upgrade mode

MCode/TCP

Color	Description
NS – Network Status	
Off	No power, no Ethernet connection
Red (flashing)	Port 503 (MCode/TCP) connected
Green (solid)	Set socket option failure
Red/green (alternating	Socket receive error or port 503 disconnected
MS – Module Status	
Green (flashing)	EtherNet/IP application loaded

MODBUS/TCP

Color	Description
NS – Network Status	
No defined functions	
MS – Module Status	
Off	No power, no Ethernet connection
Red (flashing)	Port 502 (MODBUS/TCP) connected
Green (solid)	Set socket option failure
Red/green (alternating	Socket receive error or port 502 disconnected

3.5 Motor data

3.5.1 LMD•57 (NEMA 23) specifications

		LMD•571	LMD•572	LMD•573
Holding torque	oz-in (N-cm)	103.4(73)	158.6 (112)	242.2 (171)
Detent torque	oz-in (N-cm)	3.89 (2.74)	5.55 (3.91)	9.72 (6.86)
Rotor inertia	oz-in-sec^2 (kg-cm^2)	0.0025 (0.18)	0.0037 (0.26)	0.0065 (0.46)
Radial load limit				
End of shaft	lb (kg)	10 (4.5)	10 (4.5)	10 (4.5)
Center of shaft flat	lb (kg)	15 (6.8)	15 (6.8)	15 (6.8)
Center of shaft	lb (kg)	20 (9.0)	20 (9.0)	20 (9.0)
Axial load limit	lb (kg)@1500RPM	20 (9.0)	20 (9.0)	20 (9.0)
Weight	oz (g)	26.4 (748)	31.2 (885)	44.0 (1247.3)

3.5.2 LMD•57 (NEMA 23) performance

Test condition: hMT OFF: 100% current 0.84 oz damper, inertia: 0.18589 oz-in^2

Single stack length
Torque in Oz-In / N-cm

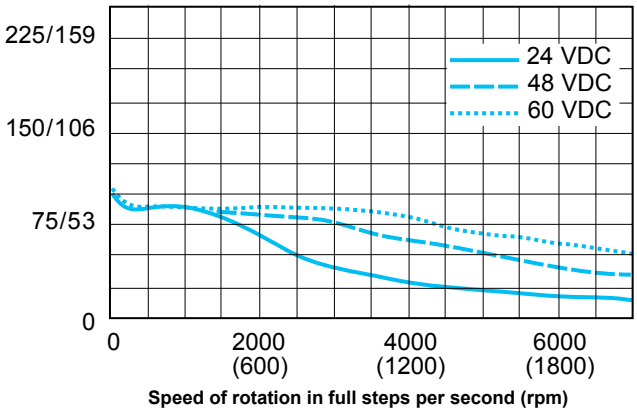

Double stack length
Torque in Oz-In / N-cm

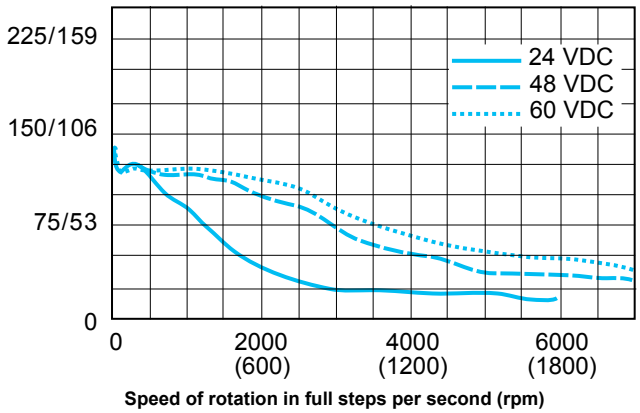

Triple stack length
Torque in Oz-In / N-cm

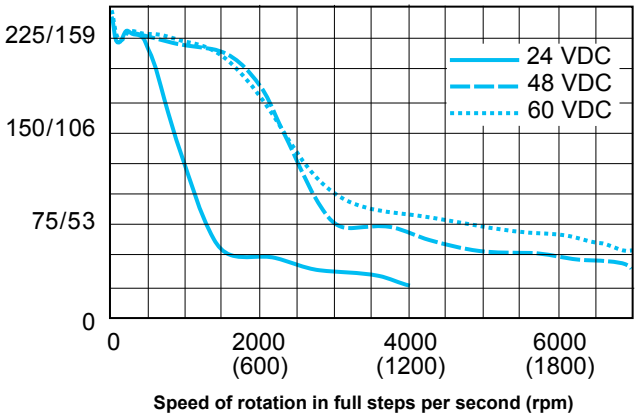

Figure 3.7: LMD•57 torque-speed performance curves

3.5.3 LMD•85 (NEMA 34) specifications

		LMD•851	LMD•852	LMD•853
Holding torque	oz-in (N-cm)	336(237)	480 (339)	920 (650)
Detent torque	oz-in (N-cm)	10.9 (7.7)	14.16 (10.0)	19.83 (14.0)
Rotor inertia	oz-in-sec^2 (kg-cm^2)	0.012745074 (0.9)	0.019117611 (1.35)	0.038235221 (2.7)
Radial load limit				
End of shaft	lb (kg)	45 (20.4)	45 (20.4)	45 (20.4)
Center of shaft flat	lb (kg)	65 (29.4)	65 (29.4)	65 (29.4)
Center of shaft	lb (kg)	80 (36.3)	80 (36.3)	80 (36.3)
Axial load limit	lb (kg)@1500RPM	20 (9.0)	20 (9.0)	20 (9.0)
Weight	oz (gm)	4.45 (2.02)	5.65 (2.56)	9.00 (4.08)

3.5.4 LMD•85 (NEMA 34) performance

Test condition: hMT OFF: 100% current 3.7 oz damper, inertia: 4.75670 oz-in2

Single stack length
Torque in Oz-In / N-cm

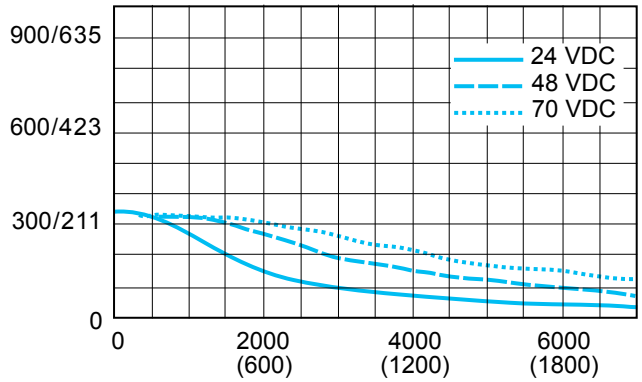

Double stack length
Torque in Oz-In / N-cm

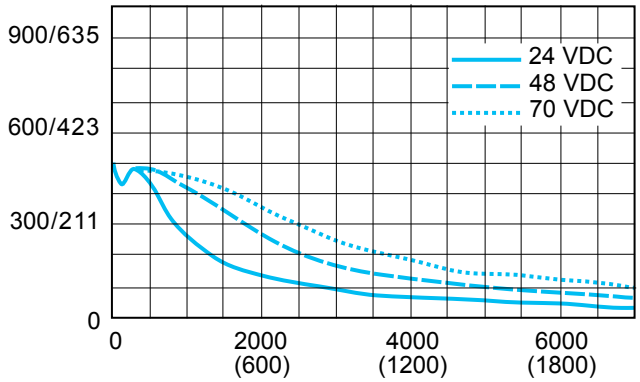

Triple stack length
Torque in Oz-In / N-cm

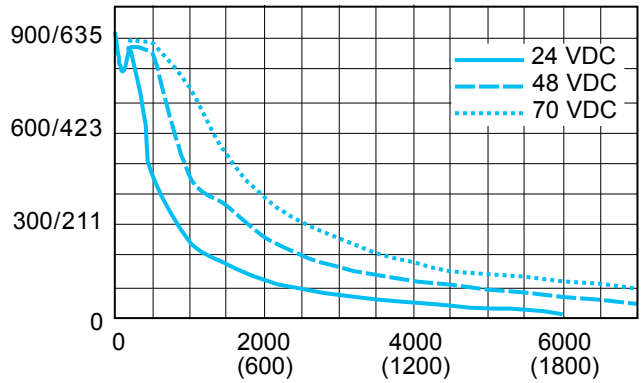

Figure 3.8: LMD•85 torque-speed performance curves

3.6 Conditions for UL 508C

If the product is used to comply with UL 508C, the following conditions must be met:

Ambient temperature during operation

Surrounding air temperature	[°C]	0 ... +50

Pollution degree

Use in an environment with pollution degree 2.

Power supply

Use only power supply units that are approved for over-voltage category III.

Wiring

Use only 60/75 °C copper conductors.

SIL	PFH at high demand or continuous demand
4	$\geq 10^{-9}$ ... $<10^{-8}$
3	$\geq 10^{-8}$ ... $<10^{-7}$
2	$\geq 10^{-7}$ ... $<10^{-6}$
1	$\geq 10^{-6}$ ... $<10^{-5}$

HFT and SFF

Depending on the SIL for the safety system, the IEC 61508 standard requires a specific hardware fault tolerance HFT in connection with a specific proportion of safe failures SFF (safe failure fraction). The hardware fault tolerance is the ability of a system to execute the required safety function in spite of the presence of one or more hardware faults. The SFF of a system is defined as the ratio of the rate of safe failures to the total failure rate of the system. According to IEC 61508, the maximum achievable SIL of a system is partly determined by the hardware fault tolerance HFT and the safe failure fraction SFF of the system.

SFF	HFT type A subsystem			HFT type B subsystem		
	0	1	2	0	1	2
< 60%	SIL1	SIL2	SIL3	—	SIL1	SIL2
60% ... <90%	SIL2	SIL3	SIL4	SIL1	SIL2	SIL3
90% ... < 99%	SIL3	SIL4	SIL4	SIL2	SIL3	SIL4
≥99%	SIL3	SIL4	SIL4	SIL3	SIL4	SIL4

Fault avoidance measures

Systematic errors in the specifications, in the hardware and the software, usage faults and maintenance faults of the safety system must be avoided to the maximum degree possible. To meet these requirements, IEC 61508 specifies a number of measures for fault avoidance that must be implemented depending on the required SIL. These measures for fault avoidance must cover the entire life cycle of the safety system, i.e. from design to decommissioning of the system.

V1.00, 04.2015

Page intentionally left blank

4 Basics

4

4.1 Functional safety

Automation and safety engineering are two areas that were completely separated in the past but recently have become more and more integrated.

Engineering and installation of complex automation solutions are greatly simplified by integrated safety functions.

Usually, the safety engineering requirements depend on the application. The level of the requirements results from the risk and the hazard potential arising from the specific application.

4.1.1 Working with IEC 61508

IEC 61508 standard

The standard IEC 61508 “Functional safety of electrical/electronic/programmable electronic safety-related systems” covers the safety-related function. It is not only one single component but the entire function chain (e.g. from the sensor through the logical processing unit to the actuator) that is considered as one single unit. This function chain must meet the requirements of the specific safety integrity level as a whole. Systems and components that can be used in various applications for safety tasks with comparable risk levels can be developed on this basis.

SIL, Safety Integrity Level

The standard IEC 61508 defines 4 safety integrity levels (SIL) for safety functions. SIL1 is the lowest level and SIL4 is the highest level. A hazard and risk analysis serves as a basis for determining the required safety integrity level. This is used to decide whether the relevant function chain is to be considered as a safety function and which hazard potential it must cover.

PFH, Probability of a dangerous hardware failure per hour

To maintain the safety function, the IEC 61508 standard requires various levels of measures for avoiding and controlling faults, depending on the required SIL. All components of a safety function must be subjected to a probability assessment to evaluate the effectiveness of the measures implemented for controlling faults. This assessment determines the PFH (probability of a dangerous failure per hour) for a safety system. This is the probability per hour that a safety system fails in a hazardous manner and the safety function cannot be correctly executed. Depending on the SIL, the PFH must not exceed certain values for the entire safety system. The individual PFH values of a function chain are added; the total PFH value must not exceed the maximum value specified in the standard.

Page intentionally left blank

5 Engineering

5

This chapter contains information on the application of the product that is vital in the design phase.

CAUTION

MULTI-MODE OPERATION

This device will operate differently in each mode of operation. It is critical that all documentation be read completely. A clear understanding of how the device is to be employed must be present before attempting to install or commission the device.

Failure to follow these instructions can result in equipment damage.

5.1 External power supply units

⚠ DANGER

ELECTRIC SHOCK CAUSED BY INCORRECT POWER SUPPLY UNIT

The `VDC, AUX_PWR` and `INPUT_REFERENCE` supply voltages are connected with many exposed signal connections in the drive system.

- Use a power supply unit that meets the PELV (Protective Extra Low Voltage) requirements.
- Connect the negative output of the power supply unit to PE (ground).

Failure to follow these instructions will result in death or serious injury.

⚠ CAUTION

GENERAL POWER SUPPLY PRACTICE

Do not connect or disconnect the power supply while power is applied.

Disconnect the AC side to power down the DC supply.

For battery operated systems connect a “transient suppressor” across the switch to prevent arcs and high-voltage spikes.

Failure to follow these instructions may result in damage to system components!

5.1.1 Supply voltage +VDC

General

The power supply unit must be rated for the power requirements of the drive. The input current can be found in the technical data.

The actual power requirements are often significantly lower because the maximum possible motor torque is usually not required for normal operation of a system.

When designing the system, note that the input current of the drive is higher during the motor acceleration phase than during constant movement.

Regeneration condition (back EMF)

Note the following for drives with large external mass moments of inertia or for highly dynamic applications:

Motors return regeneration energy during deceleration. The DC bus can store a limited amount of energy in the capacitors. Connecting additional capacitors to the DC bus increases the amount of energy that can be stored.

If the capacity of the capacitors is exceeded, the excess energy must be discharged via internal or external braking resistors.

Overvoltage conditions can be limited by adding a braking resistor with a corresponding braking resistor controller. This converts the regenerated energy to heat energy during deceleration.

⚠CAUTION

LOSS OF CONTROL DUE TO REGENERATION CONDITION

Regeneration conditions resulting from braking or external driving forces may increase the VDC supply voltage to an unexpected level. Components not rated for this voltage may be destroyed or cause malfunctions.

- Verify that all VDC consumers are rated for the voltage occurring during regeneration conditions (for example limit switches).
- Use only power supply units that will not be damaged by regeneration conditions.
- Use a braking resistor controller, if necessary.

Failure to follow these instructions can result in injury or equipment damage.

Power supply cabling

⚠ CAUTION

EMI and RFI

These recommendations will provide optimal protection against EMI and RFI. The actual cable type, wire gauge, shield type and filtering devices used are dependent on the customer's application and system.

The length of the DC power supply cable to an MDrive should not exceed 50 feet (15.2 m).

Always use shielded/twisted pairs for the Lexium MDrive DC supply cable.

Failure to follow these instructions may result in damage to system components!

Cable length, wire gauge and power conditioning devices play a major role in the performance of your Lexium MDrive.

Figure 5.1 illustrates the recommended cable configuration for DC power supply cabling under 50 feet (15.2 m) long. If cabling of 50 feet (15.2 m) or longer is required, the additional length may be gained by adding an AC power supply cable (see Figures 5.2 and 5.3).

Correct AWG wire size is determined by the current requirement plus cable length.

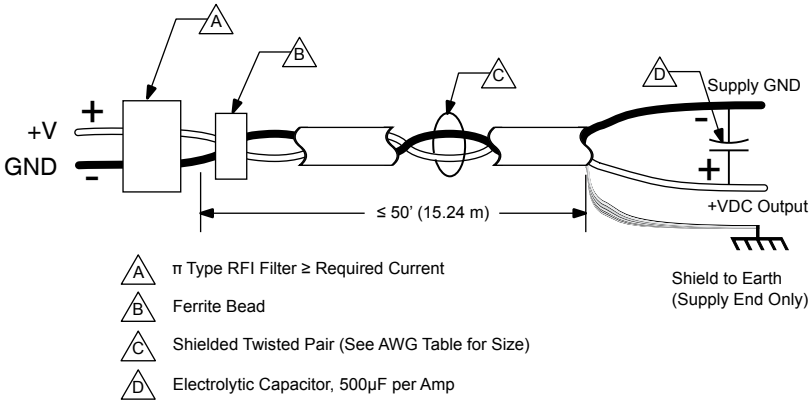

Figure 5.1: DC power supply cabling under 50' (15.24 m)

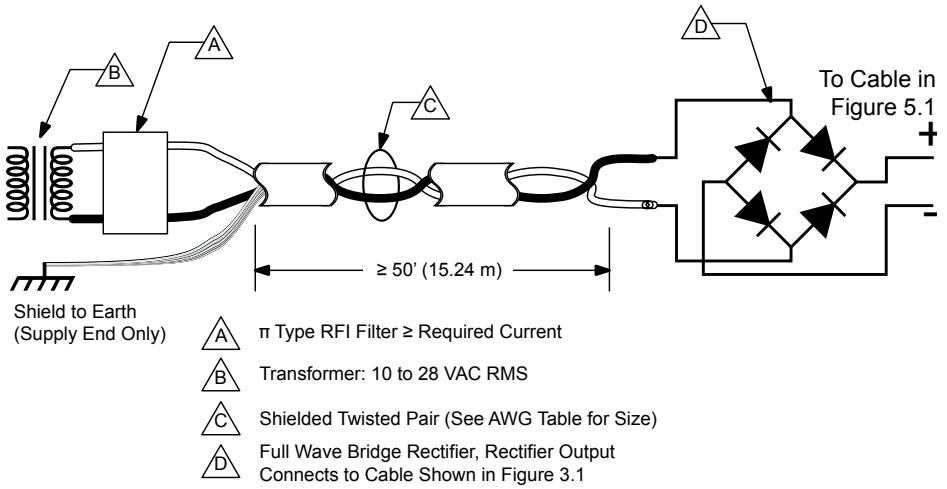

Figure 5.2: AC power to full wave bridge

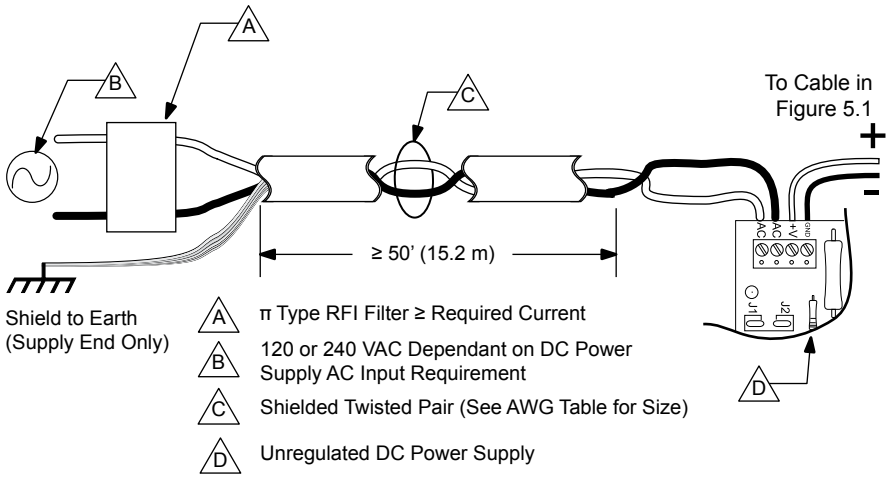

Figure 5.3: AC power to DC supply

Recommended AWG (mm^2) per current and distance

Length [ft (m)]	10 (3.0)	25 (7.6)	50 (15.2)	75 (22.9)	100 (30.5)
Amps (peak)	**Minimum AWG (mm^2)**				
1	20 (0.5)	20 (0.5)	18 (0.75)	18 (0.75)	18 (0.75)
2	20 (0.5)	18 (0.75)	16 (1.5)	14 (2.5)	14 (2.5)
3	18 (0.75)	16 (1.5)	14 (2.5)	12 (4.0)	12 (4.0)
4	18 (0.75)	16 (1.5)	14 (2.5)	12 (4.0)	12 (4.0)

5.1.2 Auxiliary power supply

The auxiliary logic supply is an optional power supply used to provide power to the logic circuitry of the Lexium MDrive in the event of main system power failure. This supply will retain data such as position.

There are no special considerations required when choosing this supply beyond:

Voltage ..... +12 to +24 VDC

Current..... 200 mA per Lexium MDrive

5.1.3 Wiring and shielding

Noise is always present in a system that involves high power and small signal circuitry. Regardless of the power configuration that you use in your system, there are some wiring and shielding rules that you should follow to keep your noise-to-signal ratio as small as possible.

Rules of wiring

- Power Supply and Motor wiring should be shielded twisted pair, and these lines should not run parallel to signal carrying wires.
- For installations which utilize separate electric motor drives and stepper motors, wiring between the driver and motor should be shielded twisted pairs using 20 gauge wire for motor current less than 4.0 amps and 18 gauge or better for motor current 4.0 amps or higher. A common mode choke may be required in each of the motor phase lines to reduce shield current levels.
- Power ground return should be as short as possible.
- Power Supply wiring should be shielded twisted pairs. Use 18 gauge wires if load is less than 4 amps, or 16 gauge for more than 4 amps.
- Never use a “daisy-chain” power supply wiring scheme to system components. This type of power distribution will result in degraded system reliability and performance as a result of poor EMC and ground-loop issues. In cases where ‘daisy-chaining” is unavoidable, the systems engineer is responsible for final system reliability and performance. The use of conservatively selected wire gauge and the use of decoupling capacitors (i.e. a combination of capacitors to provide for acceptable low frequency and high frequency noise reduction) at each electronic drive should be considered as a minimum.

Rules of shielding

- The shield must be tied to zero-signal reference potential. In order for shielding to be effective, it is necessary for the shield to be earthed or grounded.
- The shield must be connected so that shield currents drain to signal-earth connections.
- The shield should be tied to a single point to prevent ground loops

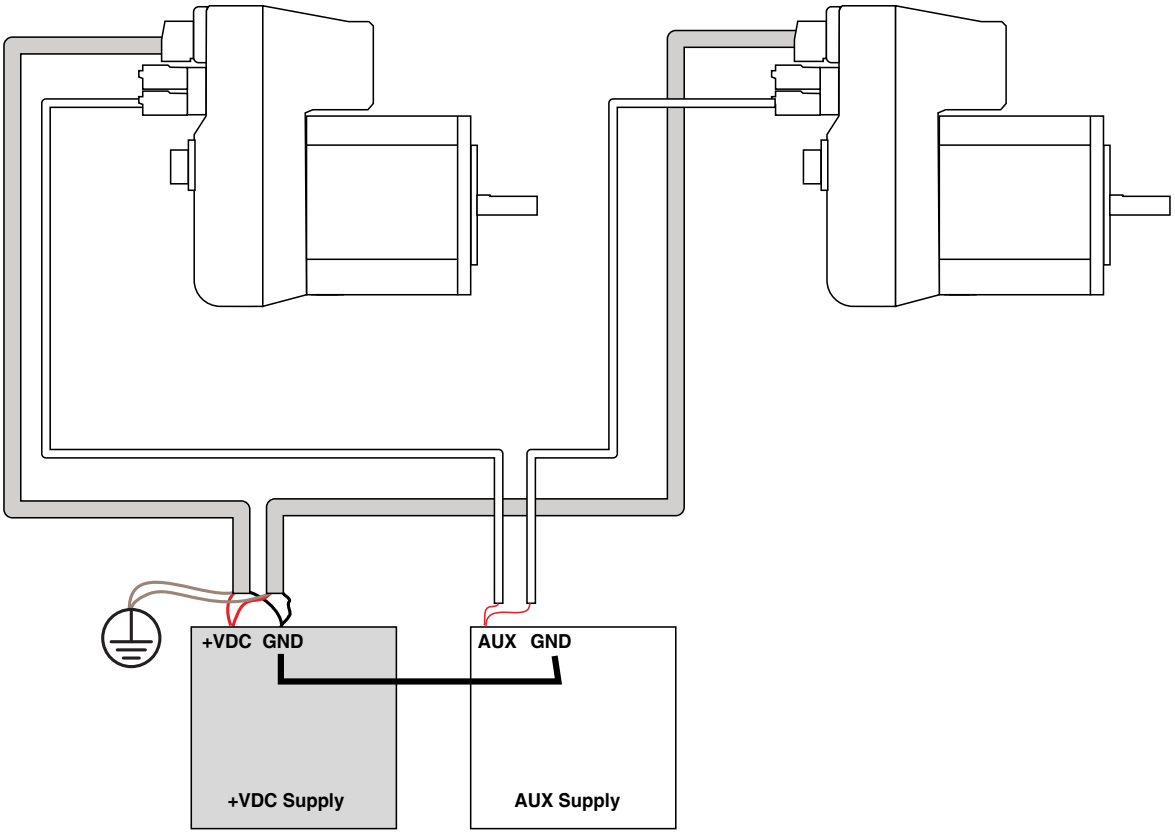

Figure 5.4: System power wiring

5.2 Ground design

The ground connections of all interfaces are galvanically connected, including the ground for the VDC supply voltage.

The multifunction interface is an exception to this in the case of devices with galvanic isolation.

The following points must be considered when you wire the drives in a system:

- The voltage drop in the VDC power supply lines must be kept as low as possible (less than 1 V). At higher ground potential differences between different drives, the communication / control signals may be affected.
- If the distance between the system components is greater, it is recommended to use decentralized power supply units close to the individual drives to supply the VDC voltage. However, the ground connections of the individual power supply units must be connected with the largest possible conductor cross section.
- If the master controller (e.g. PLC, IPC etc.) does not have galvanically isolated outputs for the drives, you must verify that the current of the VDC supply voltage has no path back to the power supply unit via the master controller. Therefore, the master controller ground may be connected to the VDC supply voltage ground at a single point only. This is usually the case in the control cabinet. The ground contacts of the various signal connectors in the drive are therefore not connected; there is already a connection via the VDC supply voltage ground.
- If the controller has a galvanically isolated interface for communication with the drives, the ground of this interface must be connected to the signal ground of the first drive. This ground may be connected to a single drive only to avoid ground loops. This also applies to a galvanically isolated CAN connection.

Equipotential bonding conductors

Potential differences can result in excessive currents on the cable shields. Use equipotential bonding conductors to reduce currents on the cable shields. The equipotential bonding conductor must be rated for the maximum current flowing. Practical experience has shown that the following conductor cross sections can be used:

- AWG 4 (16 mm^2) for equipotential bonding conductors up to a length of 650 ft (200 m)
- AWG 4 (20 mm^2) for equipotential bonding conductors with a length of more than 650 ft (200 m)

5.2.3 Protective earth

The Lexium MDrive should be earthed to a common system earth point. Multiple earth points within a system may be at different potentials which can lead to recirculating currents (ground loops).

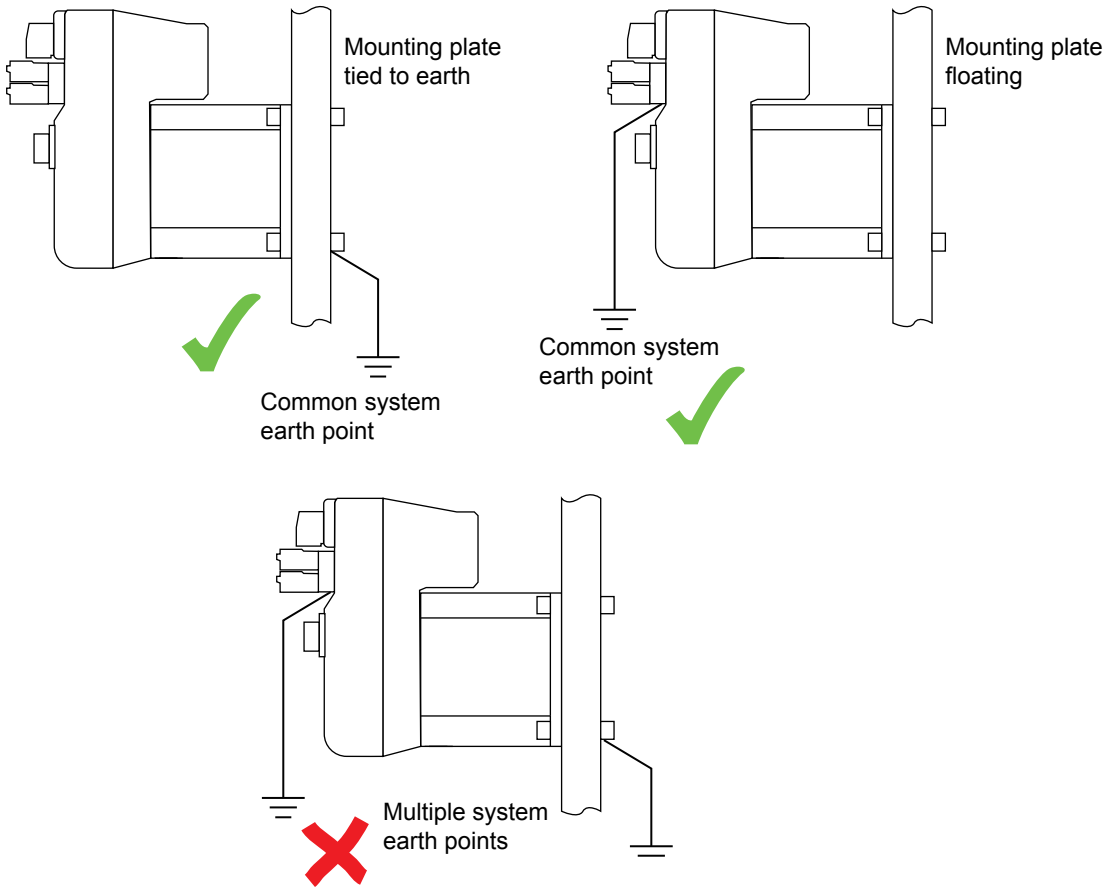

Figure 5.5: Earth connection best practices

5.3 Monitoring functions

The monitoring functions in the product can help to guard the system and reduce the risks involved in a system malfunction. These monitoring functions may not be used to protect persons.

The following monitoring functions are available and be monitored by two methods:

1) **Software**: may be monitored using software via the service interface
2) **Hardware:** may be monitored using the signal outputs via the multifunction interface.

6 Installation

6

⚠WARNING

LOSS OF CONTROL

- The designer of any control scheme must consider the potential failure modes of control paths and, for certain critical functions, provide a means to achieve a safe state during and after a path failure. Examples of critical control functions are EMERGENCY STOP, overtravel stop, power outage and restart.
- Separate or redundant control paths must be provided for critical functions.
- System control paths may include communication links. Consideration must be given to the implication of unanticipated transmission delays or failures of the link.
- Observe all accident prevention regulations and local safety guidelines. 1)
- Each implementation of the product must be individually and thoroughly tested for proper operation before being placed into service.

Failure to follow these instructions can result in death or serious injury.

1) For USA: Additional information, refer to NEMA ICS 1.1 (latest edition), “Safety Guidelines for the Application, Installation, and Maintenance of Solid State Control” and to NEMA ICS 7.1 (latest edition), “Safety Standards for Construction and Guide for Selection, Installation and Operation of Adjustable-Speed Drive Systems”.

⚠CAUTION

RISK OF INJURY WHEN REMOVING CIRCUIT BOARD PLUGS

- When removing them note that the connectors must be unlocked.
  - — Supply voltage VDC: Unlock by pulling at the plug housing
  - — Miscellaneous: Unlock by pressing the locking lever
- Always hold the plug to remove it (not the cable).

Failure to follow these instructions can result in injury or equipment damage.



Chapter 5, Engineering, contains basic information that you should now before starting the installation.

6.1 Electromagnetic compatibility, EMC

⚠WARNING

SIGNAL AND DEVICE INTERFERENCE

Signal interference can cause unexpected responses of device.

- Install the wiring in accordance with the EMC requirements.
- Verify compliance with the EMC requirements.

Failure to follow these instructions can result in death or serious injury.

This drive system meets the EMC requirements according to the standard IEC 61800-3, if the described measures are implemented during installation. If it is operated outside this scope, note the following:

⚠WARNING

HIGH-FREQUENCY INTERFERENCE

- In a domestic environment this product may cause high-frequency interference that may require action to suppress interference.

Failure to follow these instructions can result in death or serious injury.

EMC measures	Effect
Keep cables as short as possible. Do not install unnecessary cable loops, use short cables from the star point in the control cabinet to the external ground connection.	Reduces capacitive and inductive interference.
Ground the product via the motor flange or with a ground strap to the ground connection at the cover of the connector housing.	Reduces emissions, increases immunity.
Ground shields of digital signal wires at both ends by connecting them to a large surface or via conductive connector housings.	Reduces interference affecting the signal wires, reduces emissions
Connect large surface areas of cable shields, use cable clamps and ground straps	Reduces emissions.

The following cables must be shielded:

- Supply voltage VDC
- Multifunction interface
- Service interface

Equipotential bonding conductors

Potential differences can result in excessive currents on the cable shields. Use equipotential bonding conductors to reduce currents on the cable shields. The equipotential bonding conductor must be rated for the maximum current flowing. Practical experience has shown that the following conductor cross sections can be used:

- AWG 4 (16 mm^2) for equipotential bonding conductors up to a length of 650 ft (200 m)
- AWG 4 (20 mm^2) for equipotential bonding conductors with a length of more than 650 ft (200 m)

6.2 Mechanical installation

⚠CAUTION

HOT SURFACES

Depending on the operation, the surface may heat up to more than 100°C (212°F).

- Do not allow contact with the hot surfaces.
- Do not allow flammable or heat-sensitive parts in the immediate vicinity.
- Consider the measures for heat dissipation described.
- Check the temperature during test runs.

Failure to follow these instructions can result in injury or equipment damage.

⚠CAUTION

MOTOR DAMAGE AND LOSS OF CONTROL

Shock or strong pressure applied to the motor shaft may destroy the motor.

- Protect the motor shaft during handling and transportation.
- Avoid shocks to the motor shaft during mounting.
- Do not press parts onto the shaft. Mount parts to the shaft by gluing, clamping, shrink-fitting or screwing.

Failure to follow these instructions can result in injury or equipment damage.

⚠WARNING

MOTOR WITHOUT BRAKING EFFECT

If power outage and faults cause the power stage to be switched off, the motor is no longer stopped by the brake and may increase its speed even more until it reaches a mechanical stop.

- Verify the mechanical situation.
- If necessary, use a cushioned mechanical stop or a suitable brake.

Failure to follow these instructions can result in death or serious injury.

⚠WARNING

LOSS OF BRAKING FORCE DUE TO WEAR OR HIGH TEMPERATURE

Applying the holding brake while the motor is running will cause excessive wear and loss of the braking force. Heat decreases the braking force.

- Do not use the brake as a service brake.
- Note that “EMERGENCY STOPS” may also cause wear
- At operating temperatures of more than 80°C (176°F), do not exceed a maximum of 50% of the specified holding torque when using the brake.

Failure to follow these instructions can result in death or serious injury.

⚠WARNING

LOAD FALLS DURING SWITCHING ON

When the brake of stepping motor drives is released and external forces are applied (vertical axes), the load may fall if the friction is low.

- In such applications, limit the load to a maximum of 25% of the static holding torque.

Failure to follow these instructions can result in death or serious injury.



To install a drive in locations difficult to access, it may be useful to carry out the electrical installation first and then install the fully wired drive.

Heat dissipation

The motor may become very hot, e.g. in the case of incorrect arrangement of multiple motor. The surface temperature of the motor must not exceed 100 °C during continuous operation.

- Verify that the maximum temperature is not exceeded.
- Verify that there is sufficient heat dissipation, e.g. by means of good ventilation or heat dissipation via the motor flange.

Mounting

The motor is designed to be mounted using four screws. The motor flange must be mounted on a flat surface to avoid mechanical tension from being transmitted to the housing. Painted surfaces have an insulating effect. During mounting verify that the motor flange is mounted in such a way as to allow for good conductivity (electrical and thermal).

Mounting screw sizes [standard (metric)]

- LMD•42: #6 (M3.5)
- LMD•57: #10 (M5)
- LMD•85: #10 (M5)

Mounting distances

No minimum clearances are required for installation. However, note that the motor can become very hot. Observe the bending radii of the cables used.

Ambient conditions

Observe the permissible ambient conditions.

6.3 Electrical installation

⚠CAUTION

DAMAGE TO SYSTEM COMPONENTS AND LOSS OF CONTROL

Interruptions of the negative connection of the controller supply voltage can cause excessively high voltages at the signal connections.

- Do not interrupt the negative connection between the power supply unit and load with a fuse or switch.
- Verify correct connection before switching on.
- Do not connect or change wiring while the supply voltage is present.

Failure to follow these instructions can result in injury or equipment damage.



Chapter 5, Engineering, contains basic information that you should now before starting the installation.

6.3.1 Overview of all connectors

Overview of connectors

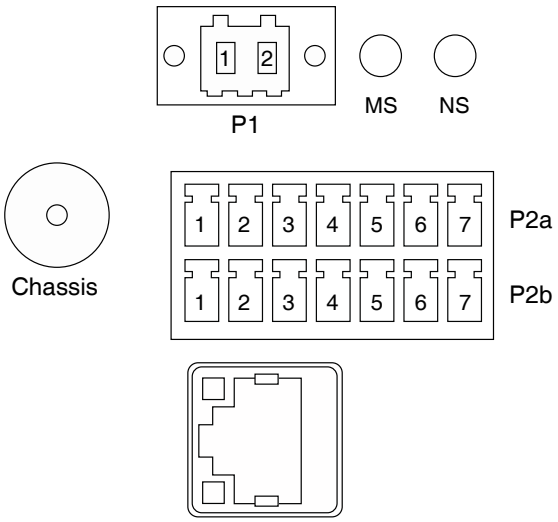

Figure 6.1: Overview of connectors

Connector	Assignment
P1	Supply voltage VDC
P2	Multifunction interface
P3	Ethernet interface

6.3.2 Connection of the supply voltage VDC

⚠ DANGER

ELECTRIC SHOCK CAUSED BY INCORRECT POWER SUPPLY UNIT

The VDC, AUX_PWR and INPUT_REFERENCE supply voltages are connected with many exposed signal connections in the drive system.

- Use a power supply unit that meets the PELV (Protective Extra Low Voltage) requirements.
- Connect the negative output of the power supply unit to PE (ground).

Failure to follow these instructions will result in death or serious injury.

⚠CAUTION

LOSS OF CONTROL DUE TO REGENERATION CONDITION

Regeneration conditions resulting from braking or external driving forces may increase the VDC supply voltage to an unexpected level. Components not rated for this voltage may be destroyed or cause malfunctions.

- Verify that all VDC consumers are rated for the voltage occurring during regeneration conditions (for example limit switches).
- Use only power supply units that will not be damaged by regeneration conditions.
- Use a braking resistor controller, if necessary.

Failure to follow these instructions can result in injury or equipment damage.

CAUTION

DAMAGE TO CONTACTS

The connection for the controller supply voltage at the product does not have an inrush current limitation. If the voltage is switched on by means of switching (hot plugging) of contacts, damage to the contacts or contact welding may result.

- Use a power supply unit that limits the peak value of the output current to a value permissible for the contact.
- Switch the power input of the power supply unit instead of the output voltage.

Failure to follow these instructions can result in equipment damage.

⚠CAUTION

DAMAGE TO SYSTEM COMPONENTS AND LOSS OF CONTROL

Interruptions of the negative connection of the controller supply voltage can cause excessively high voltages at the signal connections.

- Do not interrupt the negative connection between the power supply unit and load with a fuse or switch.
- Verify correct connection before switching on.
- Do not connect or change wiring while the supply voltage is present.

Failure to follow these instructions can result in injury or equipment damage.

Pin assignment

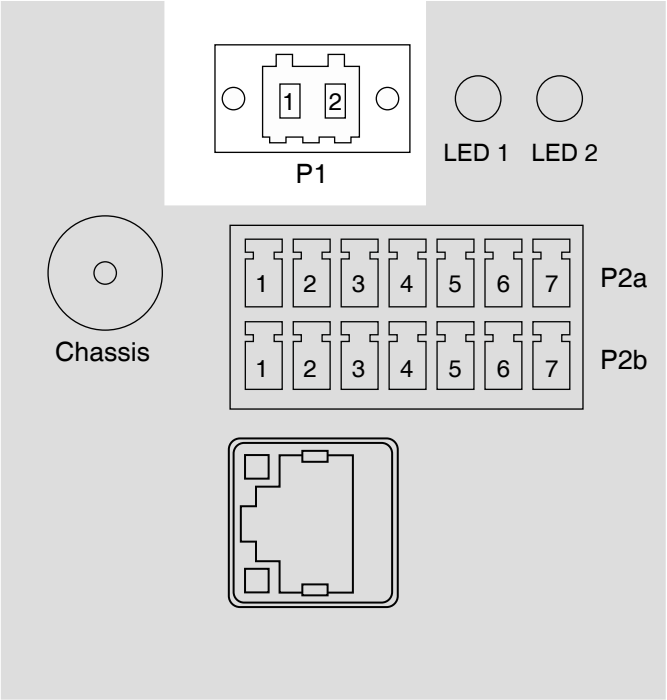

Figure 6.2: Pin Assignment supply voltage

Signal	Function	Pin number
VDC	Supply voltage	1
0VDC	Reference potential to VDC	2

NOTE: Read Section 5: Engineering before connecting power to system components.

Wiring/cable specifications

It is recommended that shielded twisted pair cabling be used for the supply voltage VDC connection.

- ▶ Verify that wiring, cables and connected interfaces meet the PELV requirements.
- ▶ Note the specified technical data.
- ▶ Note the information provided in chapters 5.1 “External power supply units” and 5.2 “Ground design”.
- ▶ Install fuses for the power supply cable accordance with the selected conductor cross section / wire gauge (note the inrush currents).

Length [ft (m)]	10 (3.0)	25 (7.6)	50 (15.2)	75 (22.9)	100 (30.5)
Amps (peak)	**Minimum AWG (mm²)**				
1	20 (0.5)	20 (0.5)	18 (0.75)	18 (0.75)	18 (0.75)
2	20 (0.5)	18 (0.75)	16 (1.5)	14 (2.5)	14 (2.5)
3	18 (0.75)	16 (1.5)	14 (2.5)	12 (4.0)	12 (4.0)
4	18 (0.75)	16 (1.5)	14 (2.5)	12 (4.0)	12 (4.0)

Connecting the cable

The connector mate is a screw lock type connector. The wire gauge is determined by the length of the conductor and the amount of current required.

To interface:

- ▶ Strip 0.25” (6.0 mm) insulation.
- ▶ Insert into designated pin
- ▶ Tighten screw to set the wire
- ▶ Insert into P1 socket and tighten lock screws

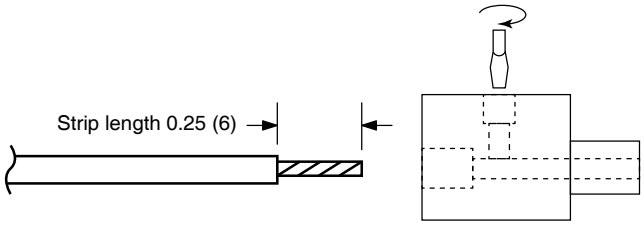

Figure 6.3: Connecting supply voltage VDC wiring

6.3.3 Connection of the multifunction interface

Pin assignments

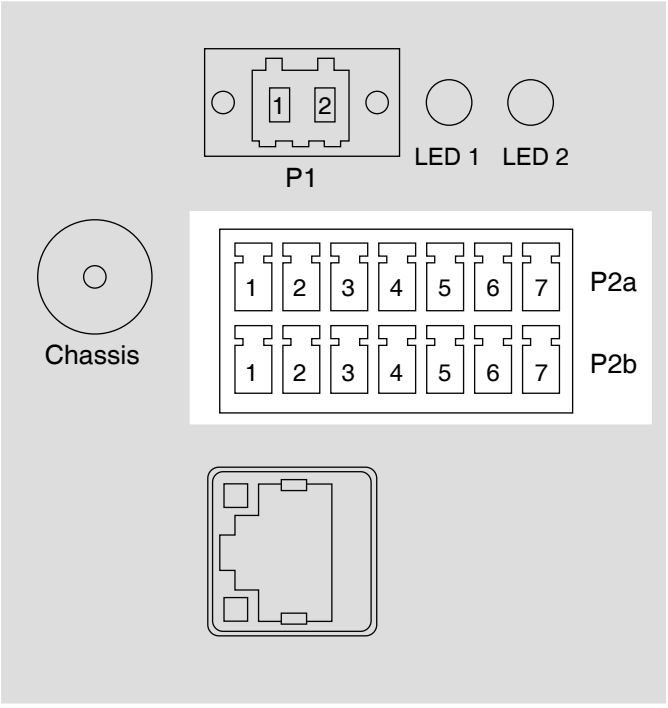

Figure 6.4: Multifunction interface pin assignments

Pin	Signal	Function	I/O
1a	INPUT_REFERENCE	Biases the input as sinking or sourcing	—
2a*	IN1/CAPTURE	General purpose programmable input with the alternate function of being a dedicated CAPTURE input.	I
3a	IN2	General purpose programmable input.	I
4a	IN3	General purpose programmable input.	I
5a	IN4	General purpose programmable input.	I
6a	ANALOG_IN	Analog input	I
7a	ANALOG_GND	Logic ground (non-isolated)	—

Pin	Signal	Function	I/O
1b	AUX_PWR	0 ... 24V auxiliary power input maintains logic circuitry and position information in the event of SUPPLY VOLTAGE VDC power loss.	—
2b	OUTPUT 1+	Power output 1 + polarity	O
3b	OUTPUT 1—	Power output 1 — polarity	O
4b	OUTPUT 2+	Power output 2 + polarity	O
5b	OUTPUT 2—	Power output 2 — polarity	O
6b	SIGNAL_OUTPUT_ COLLECTOR	High speed signal output collector	O
7b	SIGNAL_OUTPUT_ EMITTER	High speed signal output emitter	O

Wiring/cable specifications

- Shielded cable
- Twisted-pair cables
- Grounding of the shield at both ends

Max cable length [1]	feet (m)	328 (100)
Minimum conductor cross section	AWG (mm^2)	24 (0,14)
Maximum conductor cross section	AWG (mm^2)	20 (0.6)
Stripping length	inches (mm)	0.25 (6.0)

1) The length depends on the conductor cross section and the driver circuit used

▶ Use equipotential bonding conductors.

▶ Verify that wiring, cables and connected interfaces meet the PELV requirements.

Connecting the cable

The connector mate is a clamp type terminal strip.

To interface:

▶ Insert into designated pin

▶ Insert into P2 socket

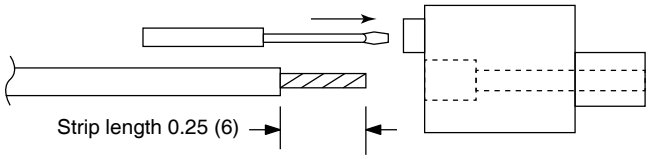

Figure 6.5: Connecting multifunction interface wiring

Circuit of the signal inputs

The signal inputs may be interfaced as sinking or sourcing as determined by the bias of the INPUT_REFERENCE. connecting the INPUT_REFERENCE to a 5 ... 24V power source will provide sinking inputs. Connecting it to ground will provide sourcing inputs.

The ACTIVE LOGIC HIGH/LOW state of the inputs is set during the commissioning of the device using the Lexium MDrive configuration tool.

The inputs are galvanically isolated by means of optocouplers.

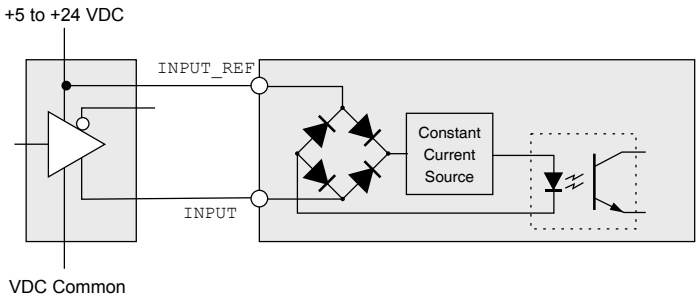

Figure 6.6: Line driven input (sinking)

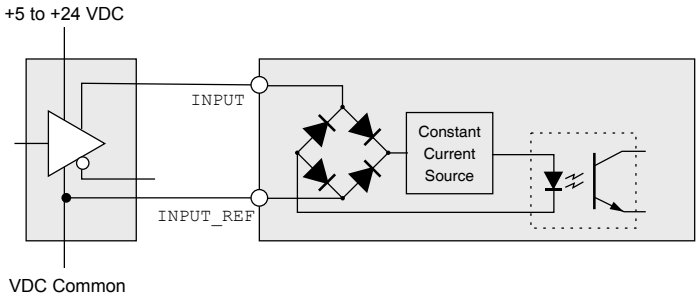

Figure 6.7: Line driven input (sourcing)

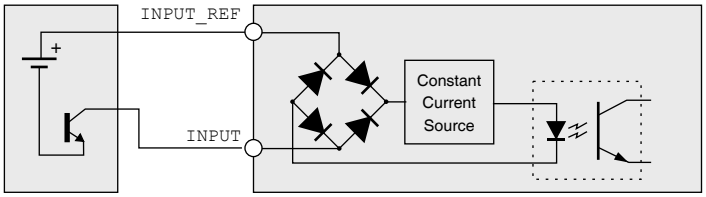

Figure 6.8: Open collector sinking

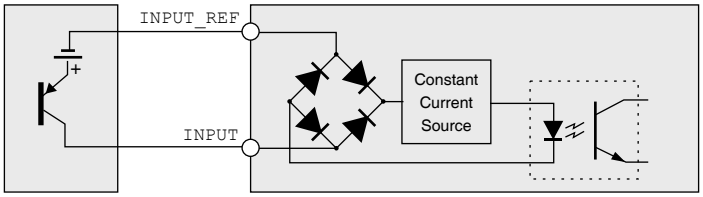

Figure 6.9: Open collector sourcing

Input wiring/usage example #1: mechanical switches

Sinking operation

In the schematic below the inputs will float at a 24V level (HIGH), then be at ground (LOW) when the switch is closed.

Sourcing operation

The configuration shown below can be switch to a sourcing configuration by reversing the bias on the Input Reference, with the power supply return connected to the reference. The inputs will then be at ground (LOW), and at 24V(HIGH) when the switch is closed.

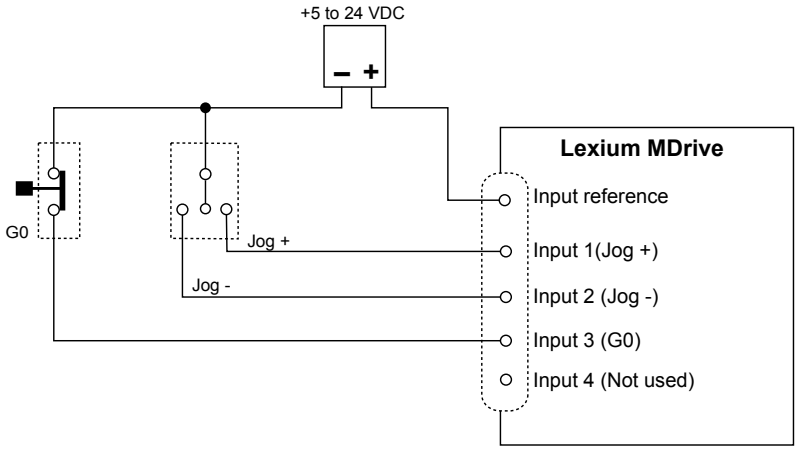

Figure 6.10: Wiring example - mechanical switches

Software setup

See Lexium MCode manual, or the appropriate fieldbus manual for full setup and configuration details for the inputs.

Input #	Function	Switch state	MCode setup string (1) (Is=[in #],[func],[active])	Notes
1	JOG +	normally open	IS=1, 7, 0	Set IN 1 as + JOG, active when low (closed)
2	JOG –	normally open	IS=2, 8, 0	Set IN 2 as — JOG, active when low (closed)
3	G0	normally closed	IS=3, 4, 1	Set IN 3 as G0, active when high (switch open)

(1) See the appropriate fieldbus manual for input setup details for MODBUS/TCP, Ethernet/ IP or Profinet IO

Input wiring/usage example #2: NPN sensors

NPN sensors in a sinking home / limit ± configuration

A common configuration is to have two sensors which define the PLUS and MINUS limits of travel, and a third to home the axis. The following illustrates three NPN sensors connected to the LMD inputs 1 - 3 in that configuration.

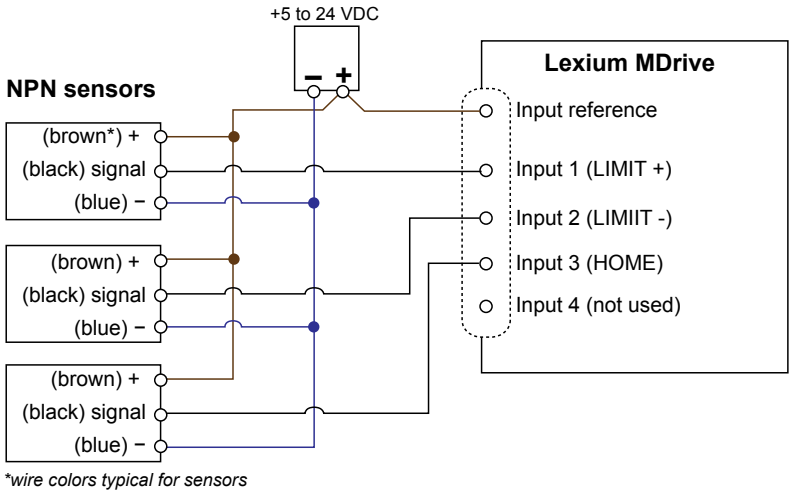

Figure 6.11: Wiring example - NPN sensors

Software setup

See Lexium MCode manual, or the appropriate fieldbus manual for full setup and configuration details for the inputs.

Input #	Function	Switch state	MCode setup string (1) (Is=[in #],[func],[active])	Notes
1	LIMIT +	normally open	IS=1, 2, 0	Set IN 1 as LIMIT +, active when low (closed)
2	LIMIT –	normally open	IS=2, 3, 0	Set IN 2 as LIMIT —, active when low (closed)
3	HOME	normally closed	IS=3, 1, 1	Set IN 3 as HOME, active when high (open)

(1) See the appropriate fieldbus manual for input setup details for MODBUS/TCP, Ethernet/ IP or Profinet IO

Input wiring/usage example #2: PNP sensors

PNP sensors in a sourcing general purpose configuration

The following illustrates three PNP sensors connected to the LMD inputs 1 - 3. These are configured as general purpose and may be used in an MCode program to perform branch or call subroutine operations.

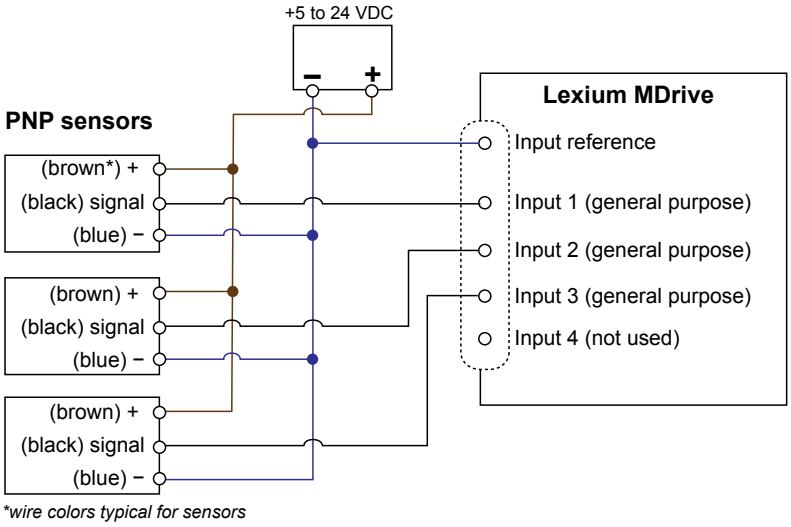

Figure 6.12: Wiring example - PNP sensors

Software setup

See Lexium MCode manual, or the appropriate fieldbus manual for full setup and configuration details for the inputs.

Input #	Function	Switch state	MCode setup string (1) (Is=[in #],[func],[active])	Notes
1	GP	normally open	IS=1, 0, 1	Set IN 1 as general purpose, active when high (closed)
2	GP	normally open	IS=2, 0, 1	Set IN 2 as general purpose, active when high (closed)
3	GP	normally open	IS=3, 0, 1	Set IN 3 as general purpose, active when high (closed)

(1) See the appropriate fieldbus manual for input setup details for MODBUS/TCP, Ethernet/ IP or Profinet IO

Power output circuits

The 100 mA, 24 VDC dry-contact type powerl outputs may be used as general purpose or configured to activate to specific programmable functions.

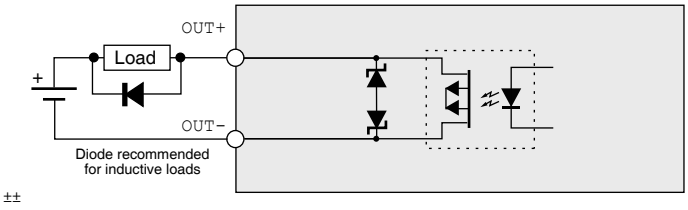

Figure 6.13: Output sinking configuration

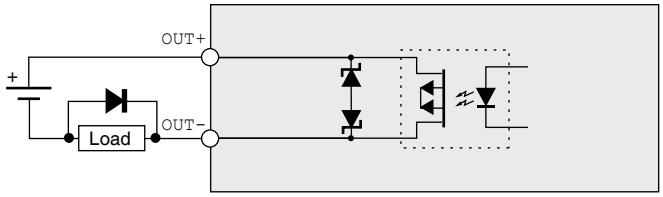

Figure 6.14: Output sourcing configuration

Output wiring/usage examples

The Lexium MDrive NEMA 23(57 mm) and 34 (85 mm) have two (2) 100 mA dry contact style power outputs which may be interfaced to a variety of devices such as LEDs, SSRs, electromechanical relays, solenoids or PLC inputs. The outputs are optically isolated.

The following diagram and table show three example applications:

1) General purpose output controlling a solid state relay to perform some action based upon a programmed event.
2) An LED which will indicate when the axis is not in motion.
3) An electromechanical relay or solenoid which will trigger a system event on motor stall.

1. Solid state relay

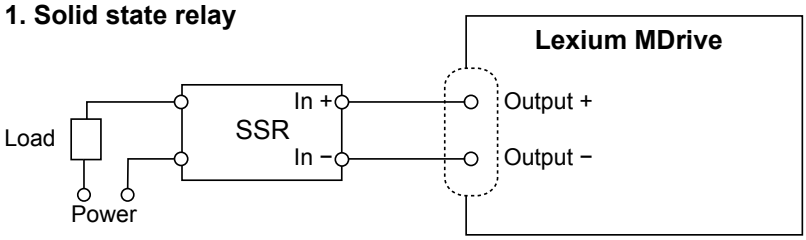

2. LED indicator

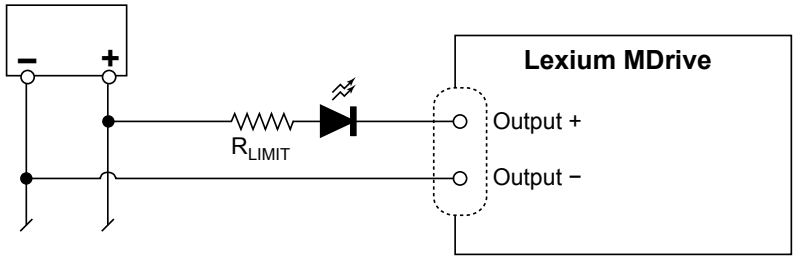

3. Inductive load

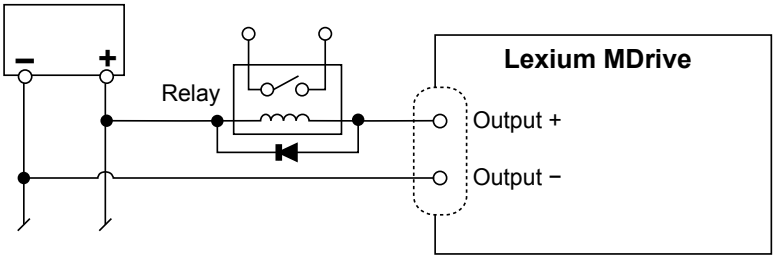

Figure 6.15: Output wiring examples

Software setup

See Lexium MCode manual, or the appropriate fieldbus manual for full setup and configuration details for the outputs.

Example #	Function	MCode setup string (1) (Os=[out #],[func],[no/nc])	Notes
1	GP	OS=1, 16, 0 (default)	Set OUT 1 as general purpose, normally open
2	MOVING	OS=2, 17, 1	Set OUT 2 as moving , normally closed
3	STALL	OS=2, 19, 0	Set OUT 2 as stall, normally open

(1) See the appropriate fieldbus manual for output setup details for MODBUS/TCP, Ethernet/ IP or Profinet IO

Signal output circuit

The signal output provides indication of trip condition(s). A condition or multiple conditions which will trigger this output are programmable.

The output is galvanically isolated by means of an optocoupler.

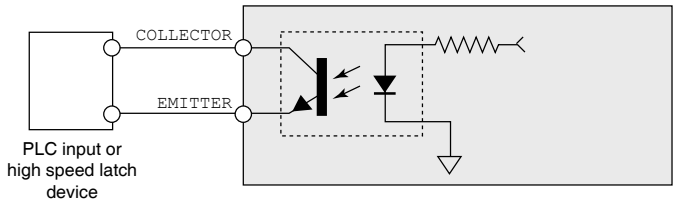

Figure 6.16: Signal output

Analog input

The ANALOG_IN may be configured to sense one of three input types:

- 0 - 5V
- 0 - 10V
- 0 - 20 mA

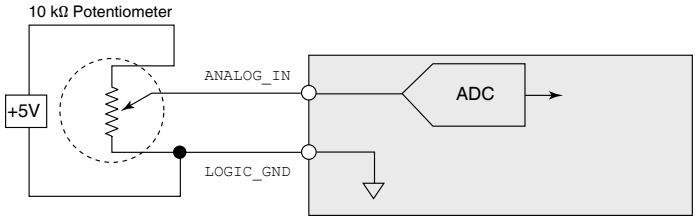

Figure 6.17: ANALOG_IN signal input

Analog input wiring/usage examples

The analog input may be used in either voltage or current loop modes with two range settings available for each mode:

- Voltage: 0 to 5V or 0 to 10 V
- Current: 0 to 20 mA or 4 to 20 mA

A typical use for the analog input would be to read the value from a sensor within an MCode program and set a position or velocity based upon that value. Note the Logic (Analog) ground pin is non-isolated (common with power ground.)

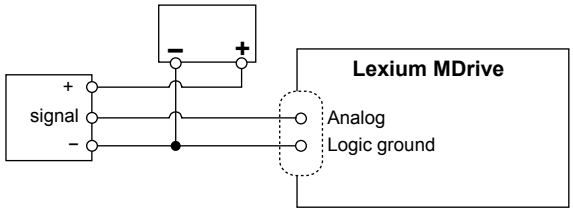

Figure 6.18: Analog input sample wiring

Software setup

See Lexium MCode manual, or the appropriate fieldbus manual for full setup and configuration details for the analog input.

Loop	Range	MCode setup string (1) (Is=5,[mode],[range])	Notes
Voltage	0 to 5V	Is=5, 9, 0	Set input to voltage mode, 0 to 5 volt range
	0 to 10V	IS=5, 9, 1	Set input to voltage mode, 0 to 10 volt range
Current	0 to 20 mA	Is=5, 10, 0	Set input to current mode, 0 to 20 mA range
	4 to 20 mA	Is=5, 10, 1	Set input to current mode, 4 to 20 mA range

(1) See the appropriate fieldbus manual for the analog input setup details for MODBUS/TCP Ethernet/ IP or Profinet IO

6.3.4 Connection of the service interface

Function The drive system is commissioned via the Ethernet interface and the commissioning software.

Connector style RJ45

6.4 Checking wiring

Check the following:

- Did you properly install and connect all cables and connectors?
- Are there any live, exposed cables?
- Did you properly connect the signal wires?

7 Configuration

7

⚠WARNING

UNEXPECTED MOVEMENT

Drives may perform unexpected movements because of incorrect wiring, incorrect settings, incorrect data or other errors.

Interference (EMC) may cause unpredictable responses in the system.

- Carefully install the wiring in accordance with the EMC requirements.
- Do NOT operate the drive system with unknown settings or data.
- Perform a comprehensive Configuration test.

Failure to follow these instructions can result in death or serious injury.

⚠WARNING

UNINTENDED BEHAVIOR

The behavior of the drive system is governed by numerous stored data or settings. Unsuitable settings or data may trigger unexpected movements or responses to signals and disable monitoring functions.

- Do NOT operate the drive system with unknown settings or data.
- Verify that the stored data and settings are correct.
- When Configuration, carefully run tests for all operating states and potential fault situations.
- Verify the functions after replacing the product and also after making changes to the settings or data.
- Only start the system if there are no persons or obstructions in the hazardous area.

Failure to follow these instructions can result in death or serious injury.

⚠WARNING

ROTATING PARTS

Rotating parts may cause injuries and may catch clothing or hair. Loose parts or parts that are unbalanced may be flung.

- Verify correct mounting and installation of all rotating parts.
- Use a cover to help protect against rotating parts.

Failure to follow these instructions can result in death or serious injury.

⚠WARNING

MOTOR WITHOUT BRAKING EFFECT

If power outage and faults cause the power stage to be switched off, the motor is no longer stopped by the brake and may increase its speed even more until it reaches a mechanical stop.

- Verify the mechanical situation.
- If necessary, use a cushioned mechanical stop or a suitable brake.

Failure to follow these instructions can result in death or serious injury.

⚠WARNING

FALLING PARTS

The motor may move as a result of the reaction torque; it may tip and fall.

- Mount the motor securely so it will not break loose during strong acceleration.

Failure to follow these instructions can result in death or serious injury.

⚠CAUTION

HOT SURFACES

Depending on the operation, the surface may heat up to more than 100°C (212°F).

- Do not allow contact with the hot surfaces.
- Do not allow flammable or heat-sensitive parts in the immediate vicinity.
- Consider the measures for heat dissipation described.
- Check the temperature during test runs.

Failure to follow these instructions can result in injury or equipment damage.

7.1 Preparing for Configuration

The following tests are required before Configuration:

- ▶ The device may be commissioned in system or out of system.
- ▶ Only supply voltage VDC and the Ethernet interface connections are required for Configuration.
- ▶ Ensure that this chapter is read in it's entirety, as many setup parameters are mode-specific.

For Configuration and programming, a PC with the Lexium MDrive Software Suite is required.



NOTE: Detailed usage instructions and screen captures of the Lexium MDrive Software Suite are found in the Lexium MDrive Software Suite software manual, which is available on the internet at:

http://motion.schneider-electric.com

NOTE: All parameters may be read/written using 2-character ASCII mnemonics via terminal emulation.

7.1.1 Installing the Lexium MDrive Software Suite

- ■ PC running Windows XP SP3 or greater.
- ■ Ethernet connection.
- ▶ Reference the Lexium MDrive Software Suite product manual for installation and configuration information.

Page intentionally left blank

8 Operation

8

8.1 Basics

8.1.1 Overview

The basic operational functionality of the Lexium MDrive TCP/IP products is impacted by the selected mode of operation. It can operate independently as a programmable motion controller on a TCP/IP network in MCode/TCP mode, as an Adapter Class device on an EtherNet/IP network or a programmable node on a MODBUS/TCP network.

The Profinet IO model may operate in MCode/TCP mode or as an IO-DEVICE on a Profinet network with an IO-CONTROLLER as a master device.

hMTechnology

C

hMTechnology functionality such as variable current control, stall elimination, position make up and torque control is available on all closed-loop Lexium MDrive TCP/IP products regardless of the control protocol used.

MCode/TCP mode

In MCode/TCP motion and I/O functionality is dictated by the devices programming and or configuration in either:

- **Immediate (streaming command) mode:** The device will respond to motion, position and I/O commands in real-time as commanded via a HMI or host PC over the TCP/IP network.
- **Program mode:** The device will move the motor, control outputs and respond to inputs in such a fashion as dictated by the programming. Programs may be executed via immediate mode execution command or I/O interactions.

Immediate and program modes may be used interchangeably as programs may be halted to issue immediate commands and then resumed.

MODBUS/TCP mode

Using MODBUS/TCP, the Lexium MDrive Ethernet is controlled by a PLC on a MODBUS/RCP network. Stored MCode programs may be executed, paused or stopped in this mode.

EtherNet/IP

The Lexium MDrive Ethernet operates as an adapter class device capable of both implicit and explicit messaging. All of the Lexium MDrive operations are controlled via the PAC or PLC.

Profinet IO

The Lexium MDrive Profinet operates as an IO-DEVICE on a Profinet network. 38 input registers and 34 output registers may be variably mapped to standard motion, I/O, control and status commands.

8.1.2 HMTechnology (HMT)

NOTE: HMTechnology IS ONLY AVAILABLE ON LMDCE MODELS WITH AN ENCODER!

HMTechnology is the core control technology that enables the multi-mode functionality of the Lexium MDrive by overcoming many of the limitations inherent in stepper systems. Two major limitations addressed by this technology are:

- Loss of motor synchronization and subsequent stalling.
- Excessive motor heated due to limited current control options

Loss of synchronization

Synchronized motion in a stepper motor requires that the lead/lag relationship between the rotor and stator be within +/- 2 motor full steps. As this relationship drifts toward the 2 step point the torque available to the load is reduced, with maximum constant torque available at the <= 1 full step point.

Conditions that can cause the stepper motor to lose synchronization and stall are:

Rotor lags stator:

- Acceleration is too rapid to apply enough torque to overcome the inertia of the load.
- Transient load condition at velocity; i.e. load being increased on a conveyor.

Rotor leads stator:

- Deceleration is too rapid to hold the load within the +/- 2 full step range.
- Overhauling load condition where the momentum of the load is greater than the torque supplied to maintain constant velocity.

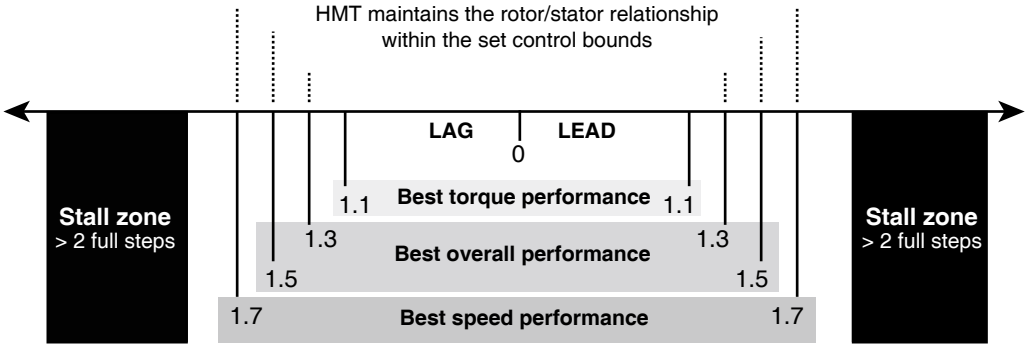

Figure 8.1: Control bounds for hMTechnology

HMT uses a high speed feedback loop to tightly maintain the rotor - stator relationship within a specified range, or control bounds.

Variable current control

Historically stepper motor drivers operate at two adjustable current levels:

1) Running current, the current level in use when the shaft is moving
2) Holding or reduction current, the current level in use when the shaft is at rest.

Variable current control uses HMT to accurately measure and track the rotor -stator relationship and apply current as needed, such as during acceleration or deceleration, then reducing the current to the level required to move the load when the axis is at velocity. This can lead to greater power efficiency and cooler running motor.

Position make-up

When active, the position make-up function stores the difference between commended pulses and actual motor steps in a register. At the completion of the move the lead or lag pulses will be reinserted into the profile and moved to the commanded position at one of two velocity presets.

8.1.2 Overview of motor phase current C

NOTE: LMDxP MODELS WITHOUT AN ENCODER WILL OPERATE IN FIXED RUN/HOLD CURRENT ONLY!

The motor phase current of the drive is influenced by the following factors:

- The setting of the run current.
- The setting of the holding current.
- The setting of the holding current delay time
- Current control defined as fixed or variable.

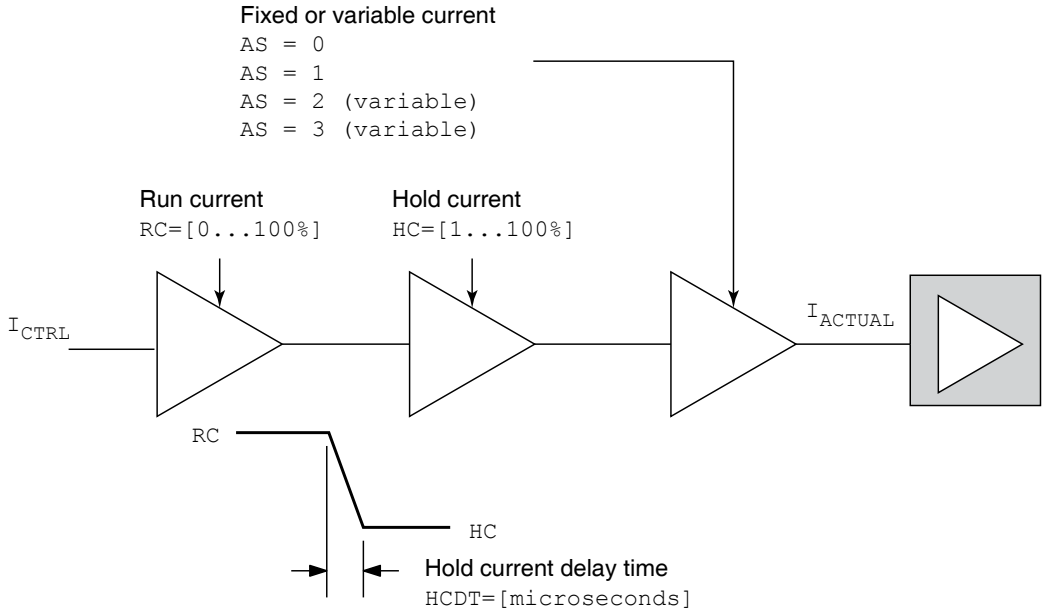

Figure 8.2: Overview of motor phase current

8.2 Software operation modes

The Lexium MDrive is controlled and programmed using the MCode language which consists of 1 and 2 character mnemonics.

Details are available in the MCode Programming and Reference manual which may be downloaded from the internet at:

http://motion.schneider-electric.com

8.2.1 Immediate (streaming command) mode (all protocols)

In immediate mode the device will respond to streaming commands via the service interface.

If used solely in this mode the device will operate as a slave in a master-slave relationship with a communication host in a centralized control system.

In immediate mode the device will respond to motion commands, will respond to queries for register data, read the state of inputs or set the state of outputs based upon instructions from the system master.

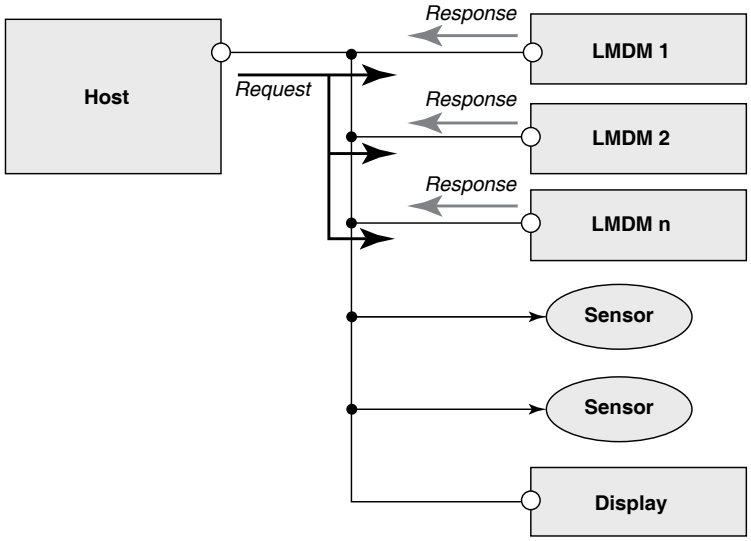

Figure 8.3: Master-slave network architecture (immediate mode application)

The network architecture shown in Figure 8.3 is an example of immediate mode operation. All system control is dictated by the programming of the host.

8.2.2 Program mode (MCode/TCP or MODBUS/TCP)

In program mode the device may operate as a standalone controller. The LMD will respond programmatically to inputs, set outputs based on flag states or register values, and send register values over the network as instructed by the programming of the device.

Program mode functionality allows the device to be used to initiate and respond to process events in a distributed intelligence system.

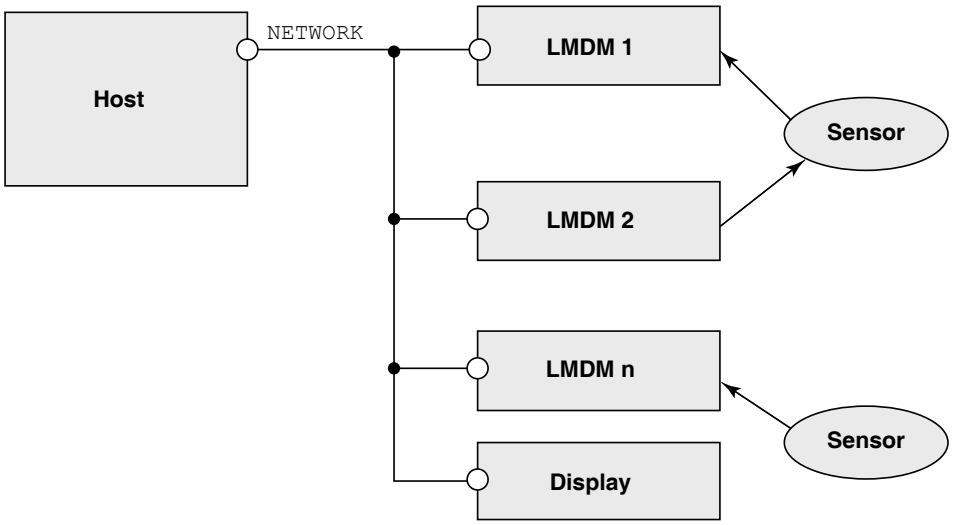

Figure 8.4: Distributed control architecture (program mode application)

The network architecture shown in Figure 8.4 is an example of program mode operation. All system control is dictated by the programming of the individual Lexium MDrives, which can perform system process actions based up I/O events. The host is in place for monitoring the system.

MODBUS/TCP exceptions

In MODBUS/TCP, the program is executed via a function code. Status and position information may be stored in preset registers which may be polled by the MODBUS PLC or Controller.

8.3 Operation by HMT modes

The LMDxM features four operational modes for the HMTechnology:

1) HMT Off (AS=0)
2) HMT On (AS=1) fixed current
3) HMT On (AS=2) variable current)
4) Torque control (AS=3)

The selected mode will have a major effect on how the device will operate during a move.

The HMT operating mode may also be changed either programmatically or immediately provided a move is not in progress.

8.3.1 HMT off (bypass) (AS=0) C O

With the HMTechnology disabled (AS=0) the motion block of the device will operate as a standard integrated stepper controller/drive/motor.

Commands for absolute (MA) or relative (MR) positioning, or slew at velocity (SL) are received via the Ethernet bus and processed as commanded, bypassing the HMT logic block.

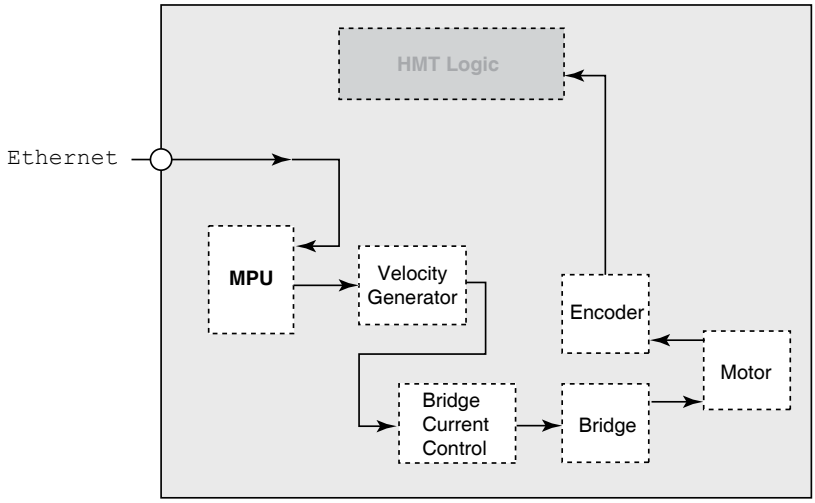

Figure 8.5: Motion block, HMT disabled

In bypass mode, the current control will be fixed at the set run (RC) and hold (HC) current percent levels.

Encoder functions are not available in bypass mode.

8.3.1 HMT on (fixed current) (AS=1)

With HMT enabled in fixed current mode (AS=1) the HMT will use the integrated encoder to maintain the rotor/stator relationship within the set control bounds.

Commands for absolute (MA) or relative (MR) positioning, or slew at velocity (SL) are received via the Ethernet bus and processed through HMT logic block. Feedback from the encoder is compared with commanded clock pulses from the velocity generator. The output of this comparison is used to keep the rotor-stator relationship within the control bounds, thus eliminating loss of synchronization.

The variance between commanded position and actual position is stored in the lead/lag register (LL) and is used to perform a position correction move if make-up (MU) is enabled.

The device will use the run (RC) and hold (HC) current settings for bridge current.

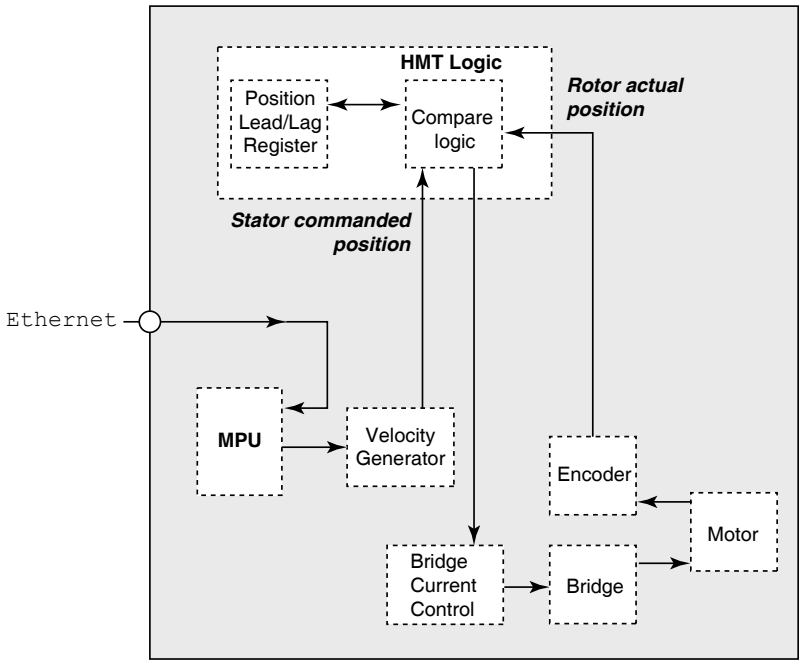

Figure 8.6: Block diagram, HMT enable (AS=1/2)

8.3.2 HMT on (variable current) (AS=2)

With HMT enabled in variable current mode (AS=2) the HMT will will function as described in Sub-section 8.3.1 with the difference that current control will be in variable mode.

In variable current mode the HMT will adjust the bridge current to the amount required to move the load. The set run current (RC) will be used as the maximum threshold.

With HMT in variable current mode the device will use less power and run cooler, depending on load and duty cycle.

8.3.3 HMT on (torque mode) (AS=3)

With HMT in torque mode (AS=3) the HMT will maintain constant torque on the load at the speed required to maintain that torque.

The amount of torque used is set using the torque percent (TQ) parameter. The maximum speed for torque mode is set using the torque speed (TS) parameter.

8.4 I/O operation

The Lexium MDrive TCP/IP products features the following I/O points:

- Four programmable general purpose inputs
- Two programmable general purpose outputs
- One 12-bit analog input
- One high-speed trip output

All of the I/O points are functionally configured in software using MCode. For detailed descriptions of each I/O configuration parameter, please reference the MCode Programming and Reference Manual at:

http://motion.schneider-electric.com

8.4.1 General purpose inputs

The general purpose inputs are +5 to +24 VDC tolerant optically isolated inputs with programmable functions and dedicated alternate functions.

The function and active logic state is defined using the command or function appropriate to the protocol being used.

Point	Function	Alternate Dedicated Function	Active
1	0 = User defined 1 = Home 2 = Limit + 3 = Limit – 4 = G0 5 = Soft stop 6 = Pause program 7 = Jog + 8 = Jog – 11 = Reset	12 = Capture	0 = Low True 1 = High True
2			
3			
4			

8.4.2 Power outputs

The general purpose power outputs are 24 VDC optically isolated, over-current protected outputs with programmable functions and alternate dedicated functions.

The function and active logic state is defined using the command or function appropriate to the protocol being used.

Point	Function	Alternate Dedicated Function	Active
1	16 = User defined 17 = Moving 18 = Software error 20 = Velocity changing 21 = Locked rotor 23 = Changing position 24 = HMT active 25 = Make-up active	—	0 = Low True 1 = High True
2		—	

8.4.3 Analog input

The analog input is a 12-bit input which operates in one of two modes. Voltage mode can be set to be 0 to 5 V or 0 to 10 V. Current mode will operate at either the 4 to 20 mA or the 0 to 20 mA level. The function defined using the command or function appropriate to the protocol being used.

Point	Function	Parameter
5	8 = Voltage mode 9 = Current mode	0 = 0 – 5 V, 4 – 20 mA 1 = 0 – 10 V, 0 – 20 mA

The value of the analog input is read using the `I5` command which will read in counts.

8.4.3 Signal (Trip) output

The signal output is an isolated high speed dedicated function output for monitoring trip events. The output may be programmed to trigger on a single trip event or any combination of events. The available events are:

- Trip on input
- Trip on absolute position
- Trip on capture
- Trip on time
- Trip on relative position
- Trip on HMT status

The trip output may also be set to any other output function, though be aware that while the output is high speed, it is lower current and can only sink 5.5 mA, where outputs 1 and 2 are 100 mA and over-current protected.

The function and active logic state is defined using the command or function appropriate to the protocol being used.

Point	Function	Alternate Function	Active
3	28 = Trip	16 = User defined 17 = Moving 18 = Software error 20 = Velocity changing 21 = Locked rotor 23 = Changing position 24 = HMT active 25 = Make-up active	0 = Low True 1 = High True

The logic state of the trip output may be set by a programmed trip event or using the `O3` command.

9 Diagnostics and troubleshooting

9

⚠CAUTION

TAMPER SEAL

Opening Lexium MDrive heat sinks can affect factory-set encoder alignment and impact hMTechnology performance. Tamper seals are to ensure factory hardware settings remain unaltered and match the encoder alignment set during the manufacturing process. If a seal is broken, the LMD product warranty is void.

- If experiencing faulty or erratic operation, contact the factory for support.

Failure to follow these instructions can result in injury or equipment damage.

9.1 Error indication and troubleshooting

9.1.1 Operation state and error indication

Temperature monitoring

Sensors in the drive measure the temperature of the power stage.

If the permissible maximum temperature is exceeded, the power stage switches off. Indication can be read by:

- Setting the `ATTENTION_OUT` to activate on over-temperature.
- Reading the error code `(71)` using a terminal emulator or the Lexium MDrive configuration utility

Stall detection (HMT disabled)

Detecting a stall condition may be accomplished by monitoring the encoder index outputs via the multifunction interface.

A stall condition can only exists when HMT is disabled `(AS=0)`. HMT will prevent loss of synchronization and subsequent stalls from occurring.

Locked rotor (HMT enabled)

A locked rotor indication identifies the condition where the rotor-stator relationship exceeded lead/lag limits `(LD/LG)` and/or locked rotor timeout `(LT)` as specified during parameterization. When this condition occurs the power stage will disable and a locked rotor error will asserted.

A locked rotor condition can only exist when HMT is enabled (AS=1/AS=2)

This status may be read using:

- Setting the ATTENTION_OUT to activate on locked rotor.
- The status LED on the rear of the device
- The HMT status bits
- The error code (81)

9.2 LED indicators

The Lexium MDrive TCP/IP products has two dual-color (red/green) LEDs visible from the back of the drive to give status and error indication of the EtherNet/IP connection.

Color	State	Description
LED 1 – Network status		
None	Off	No power, no Ethernet connection
Red	Solid	Unrecoverable fault
	Flashing	Recoverable fault or I/O connection timed out
Green	Solid	Normal runtime operation (I/O connection allocated)
	Flashing	Device is idle or not allocated to a client (PLC)
Red/green	Alternating	Power-up self test in progress
LED 2 – I/O status		
None	Off	No power
Red	Solid	Unrecoverable fault
	Flashing	Minor, recoverable fault
Green	Solid	I/O connection established
	Flashing	Standby, no I/O connection established
Red/green	Alternating	Power-up self test in progress

Profinet-IO

Color	State	Description
NS – Network Status		
None	Off	No power
Green	Solid	Valid Profinet connection exists
	Flashing	Device never connected
Red	Solid	Profinet stack failure
	Flashing	Profinet connection lost/disconnected
MS – Module Status		
None	Off	No power
Red	Solid	Unrecoverable fault - drive not responding
	Flashing	Minor, recoverable fault

Green	Solid	Device operational
	Flashing	Drive fault/failure, in firmware upgrade mode

MCode/TCP

Color	Description
NS – Network Status	
Off	No power, no Ethernet connection
Red (flashing)	Port 503 (MCode/TCP) connected
Green (solid)	Set socket option failure
Red/green (alternating	Socket receive error or port 503 disconnected
MS – Module Status	
Green (flashing)	EtherNet/IP application loaded

MODBUS/TCP

Color	Description
NS – Network Status	
No defined functions	
MS – Module Status	
Off	No power, no Ethernet connection
Red (flashing)	Port 502 (MODBUS/TCP) connected
Green (solid)	Set socket option failure
Red/green (alternating	Socket receive error or port 502 disconnected

9.3 Error codes

Error codes may be read by querying the device via a terminal emulator using:

```
PR ER
```

The response will come in the form of the error code existing.

For a listing of error codes refer to the Lexium MCode manual, Section 9..

This page intentionally left blank

10 Accessories and spare parts

10

10.1 Accessories

Source commissioning software

The latest version of the commissioning software is available for download from the internet:

Mating connectors

Description	Part number
Replacement connector kit	CK-15

Replacement connector kit CK15

The replacement connector kit contains replacement connectors for P1 and P2.

P1: 2-pin power connector

P2a: 7-pin I/O top connector (yellow)

P2b: 7-pin I/O bottom connector (gray)

Page intentionally left blank

11 Service, maintenance and disposal

11

⚠CAUTION

DAMAGE TO SYSTEM COMPONENTS AND LOSS OF CONTROL

Interruptions of the negative connection of the controller supply voltage can cause excessively high voltages at the signal connections.

- Do not interrupt the negative connection between the power supply unit and load with a fuse or switch.
- Verify correct connection before switching on.
- Do not connect or change wiring while the supply voltage is present.

Failure to follow these instructions can result in injury or equipment damage.

⚠CAUTION

RISK OF INJURY WHEN REMOVING CIRCUIT BOARD PLUGS

- When removing them note that the connectors must be unlocked.
  - Supply voltage VDC: unlock by removing locking screws
  - Multifunction interface: unlock with locking tabs
- Always hold the plug to remove it (not the cable).

Failure to follow these instructions can result in injury or equipment damage.

⚠CAUTION

TAMPER SEAL

Opening Lexium MDrive heat sinks can affect factory-set encoder alignment and impact hMTechnology performance. Tamper seals are to ensure factory hardware settings remain unaltered and match the encoder alignment set during the manufacturing process. If a seal is broken, the LMD product warranty is void.

- If experiencing faulty or erratic operation, contact the factory for support.

Failure to follow these instructions can result in injury or equipment damage.



The product may only be repaired by a certified customer service center. No warranty or liability is accepted for repairs made by unauthorized persons.

11.1 Service address



If you cannot resolve an error yourself please contact your sales office. Have the following details available:

- Nameplate (type, identification number, serial number, DOM, ...)
- Type of error (such as LED flash code or error number)
- Previous and concomitant circumstances
- Your own assumptions concerning the cause of the error

Also include this information if you return the product for inspection or repair. Note that units being returned for inspection or repair must be accompanied by a Return Material Authorization (RMA).

Technical or applications support is available via the internet at:

http://motion.schneider-electric.com

11.2 Maintenance

Check the product for pollution or damage at regular intervals, depending on the way you use it.

11.3 Replacing units

⚠WARNING

UNINTENDED BEHAVIOR

The behavior of the drive system is governed by numerous stored data or settings. Unsuitable settings or data may trigger unexpected movements or responses to signals and disable monitoring functions.

- Do NOT operate the drive system with unknown settings or data.
- Verify that the stored data and settings are correct.
- When commissioning, carefully run tests for all operating states and potential fault situations.
- Verify the functions after replacing the product and also after making changes to the settings or data.
- Only start the system if there are no persons or obstructions in the hazardous area.

Failure to follow these instructions can result in death or serious injury.

Only start the system if there are no persons or obstructions in the hazardous area.

- ▶ Switch off all supply voltages. Verify that no voltages are present (safety instructions).
- ▶ Label all connections and uninstall the product.
- ▶ Note the identification number and the serial number shown on the product nameplate for later identification.
- ▶ Install the new product as per chapter 6 “Installation”
- ▶ Commission the product as per chapter 7 “Commissioning”.

11.4 Shipping, storage, disposal

Removal Removal procedure:

- ▶ Switch off the power supply.
- ▶ Disconnect the power supply.
- ▶ Pull out all plugs.
- ▶ Remove the product from the system.

Shipping The product must be protected against shocks during transportation. If possible, use the original packaging for shipping.

Storage The product may only be stored in spaces where the specified permissible ambient conditions for room temperature and humidity are met. Protect the product from dust and dirt.

Disposal The product consists of various materials that can be recycled and must be disposed of separately. Dispose of the product in accordance with local regulations.

Page intentionally blank

12 Glossary

12

12.1 Units and conversion tables

The value in the specified unit (left column) is calculated for the desired unit (top row) with the formula (in the field).

Example: conversion of 5 meters [m] to yards [yd]
5 m / 0.9144 = 5.468 yd

12.1.1 Length

	in	ft	yd	m	cm	mm
in	—	/ 12	/ 36	* 0.0254	* 2.54	* 25.4
ft	* 12	—	/ 3	* 0.30479	* 30.479	* 304.79
yd	* 36	* 3	—	* 0.9144	* 91.44	* 914.4
m	/ 0.0254	/ 0.30479	/ 0.9144	—	* 100	* 1000
cm	/ 2.54	/ 30.479	/ 91.44	/ 100	—	* 10
mm	/ 25.4	/ 304.79	/ 914.4	/ 1000	/ 10	—

12.1.2 Mass

	lb	oz	slug	kg	g
lb	—	* 16	* 0.03108095	* 0.4535924	* 453.5924
oz	/ 16	—	* $1.942559*10^{-3}$	* 0.02834952	* 28.34952
slug	/ 0.03108095	* $1.942559*10^{-3}$	—	* 14.5939	* 14593.9
kg	/ 0.453592370	/ 0.02834952	/ 14.5939	—	* 1000
g	/ 453.592370	/ 28.34952	/ 14593.9	/ 1000	—

12.1.3 Force

	lb	oz	p	dyne	N
lb	—	* 16	* 453.55358	* 444822.2	* 4.448222
oz	/ 16	—	* 28.349524	* 27801	* 0.27801
p	/ 453.55358	/ 28.349524	—	* 980.7	* $9.807*10^{-3}$
dyne	/ 444822.2	/ 27801	/ 980.7	—	/ $100*10^{3}$
N	/ 4.448222	/ 0.27801	/ $9.807*10^{-3}$	* $100*10^{3}$	—

V1.00, 04.2015

12.1.4 Power

	HP	W
HP	—	* 745.72218
W	/ 745.72218	—

12.1.5 Rotation

	min^{-1} (RPM)	rad/s	deg./s
min^{-1} (RPM)	—	* π / 30	* 6
rad/s	* 30 / π	—	* 57.295
deg./s	/ 6	/ 57.295	—

12.1.6 Torque

	lb·in	lb·ft	oz·in	Nm	kp·m	kp·cm	dyne·cm
lb·in	—	/ 12	* 16	* 0.112985	* 0.011521	* 1.1521	* $1.129*10^6$
lb·ft	* 12	—	* 192	* 1.355822	* 0.138255	* 13.8255	* $13.558*10^6$
oz·in	/ 16	/ 192	—	* $7.0616*10^{-3}$	* $720.07*10^{-6}$	* $72.007*10^{-3}$	* 70615.5
Nm	/ 0.112985	/ 1.355822	/ $7.0616*10^{-3}$	—	* 0.101972	* 10.1972	* $10*10^6$
kp·m	/ 0.011521	/ 0.138255	/ $720.07*10^{-6}$	/ 0.101972	—	* 100	* $98.066*10^6$
kp·cm	/ 1.1521	/ 13.8255	/ $72.007*10^{-3}$	/ 10.1972	/ 100	—	* $0.9806*10^6$
dyne·cm	/ $1.129*10^6$	/ $13.558*10^6$	/ 70615.5	/ $10*10^6$	/ $98.066*10^6$	/ $0.9806*10^6$	—

12.1.7 Moment of inertia

	$lb·in^2$	$lb·ft^2$	$kg·m^2$	$kg·cm^2$	$kp·cm·s^2$	$oz·in^2$
$lb·in^2$	—	/ 144	/ 3417.16	/ 0.341716	/ 335.109	* 16
$lb·ft^2$	* 144	—	* 0.04214	* 421.4	* 0.429711	* 2304
$kg·m^2$	* 3417.16	/ 0.04214	—	* $10*10^3$	* 10.1972	* 54674
$kg·cm^2$	* 0.341716	/ 421.4	/ $10*10^3$	—	/ 980.665	* 5.46
$kp·cm·s^2$	* 335.109	/ 0.429711	/ 10.1972	* 980.665	—	* 5361.74
$oz·in^2$	/ 16	/ 2304	/ 54674	/ 5.46	/ 5361.74	—

12.1.8 Temperature

	°F	°C	K
°F	—	(°F - 32) * 5/9	(°F - 32) * 5/9 + 273.15
°C	°C * 9/5 + 32	—	°C + 273,15
K	(K - 273.15) * 9/5 + 32	K - 273.15	—

12.1.9 Conductor cross section

AWG	1	2	3	4	5	6	7	8	9	10	11	12	13
mm^2	42.4	33.6	26.7	21.2	16.8	13.3	10.5	8.4	6.6	5.3	4.2	3.3	2.6

AWG	14	15	16	17	18	19	20	21	22	23	24	25	26
mm^2	2.1	1.7	1.3	1.0	0.82	0.65	0.52	0.41	0.33	0.26	0.20	0.16	0.13

12.2 Terms and Abbreviations

AC Alternating current

Acceleration The time rate of change of velocity with respect to a fixed reference frame. The commanded step rate is started at a base velocity and accelerated at a slew velocity at a defined and controlled rate or rate of changes.

ASCII American Standard Code for Information Interchange. Standard for coding of characters.

Back Electro-Motive Force (Back EMF) Also known as regeneration current, the reversed bias generated by rotation of the magnetic field across a stator's windings. Sometimes referred to as counter EMF.

CAN (Controller Area Network), standardized open fieldbus as per ISO 11898, allows drives and other devices from different manufacturers to communicate.

CANopen CANopen is a CAN-based higher layer protocol. It was developed as a standardized embedded network with highly flexible configuration capabilities. CANopen was designed motion oriented machine control networks, such as handling systems. It is used in many various fields, such as medical equipment, off-road vehicles, maritime electronics, public transportation, building automation, etc

Closed Loop System In motion control, this term describes a system wherein a velocity or position (or both) sensor is used to generate signals for comparison to desired parameters. For cases where loads are not predictable, the closed loop feedback from an external encoder to the controller may be used for stall detection, position maintenance or position verification.

Daisy Chain This term is used to describe the linking of several devices in sequence, such that a single signal stream flows through one device and on to another

DC	Direct current
Deadband	A range of input signals for which there is no system response.
Default value	Factory setting.
Detent Torque	The periodic torque ripple resulting from the tendency of the magnetic rotor and stator poles to align themselves to positions of minimal reluctance. The measurement is taken with all phases de-energized.
Direction of rotation	Rotation of the motor shaft in a clockwise or counterclockwise direction of rotation. Clockwise rotation is when the motor shaft rotates clockwise as you look at the end of the protruding motor shaft.
DOM	The Date of manufacturing on the nameplate of the device is shown in the format DD.MM.YY, e.g. 31.12.06 (December 31, 2006).
Duty Cycle	For a repetitive cycle, the ratio of on time to total cycle time.
EMC	Electromagnetic compatibility
Encoder	Sensor for detection of the angular position of a rotating component. The motor encoder shows the angular position of the rotor.
Error class	Classification of errors into groups. The different error classes allow for specific responses to faults, e.g. by severity.
Fatal error	In the case of fatal error, the drive is no longer able to control the motor, so that an immediate switch-off of the drive is necessary.
Fault	Operating state of the drive caused as a result of a discrepancy between a detected (computed, measured or signaled) value or condition and the specified or theoretically correct value or condition.
Fault reset	A function used to restore the drive to an operational state after a detected fault is cleared by removing the cause of the fault so that the fault is no longer active (transition from state “Fault” to state “Operation Enable”).
Forcing	Forcing switching states of inputs/outputs. Forcing switching states of inputs/outputs.
Full Duplex	The transmission of data in two directions simultaneously. For example, a telephone is a full-duplex device because both parties can talk at the same time.

Ground Loop A ground loop is any part of the DC return path (ground) that has more than one possible path between any two points.

Half Duplex The transmission of data in just one direction at a time. For example, a walkie-talkie is a half-duplex device because only one party can talk at a time.

Half Step This term means that the motor shaft will move a distance of 0.9 degree (400 steps per shaft revolution) instead of moving 1.8 degree per digital pulse.

hMTechnology (hMT) A motor control technology representing a new paradigm in brushless motor control. By bridging the gap between stepper and servo performance, hMT offers system integrators a third choice in motion system design.

Hybrid Motors Hybrid stepper motors feature the best characteristics of PM and VR motors. Hybrid steppers are best suited for industrial applications because of high static and run torque, a standard low step angle of 1.8°, and the ability to Microstep. Hybrid stepper motors offer the ability to precisely position a load without using a closed-loop feedback device such as an encoder.

Holding Torque The maximum torque or force that can be externally applied to a stopped, energized motor without causing the rotor to rotate continuously. This is also called “static torque”.

I/O Inputs/outputs

Inc Increments

Index pulse Signal of an encoder to reference the rotor position in the motor. The encoder returns one index pulse per revolution.

Inertia A measure of an object’s resistance to a change in velocity. The larger an object’s inertia, the greater the torque required to accelerate or decelerate it. Inertia is a function of an object’s mass and shape. For the most efficient operation, the system-coupling ratio should be selected so that the reflected inertia of the load is equal to or no greater than 10 times the rotor inertia of the stepper motor.

Inertia (Reflected) Inertia as seen by the stepper motor when driving through a speed change, reducer or gear train.

Lag The amount (in full motor steps) that the rotor lags the stator. Lag conditions are caused by loading on the motor shaft, as during transient loading or rapid acceleration.

Lead The amount (in full motor steps) that the rotor leads the stator. Lead conditions are caused by an overhauling load, as during periods of rapid deceleration.

Limit switch Switch that signals overtravel of the permissible range of travel.

Load Any external resistance (static or dynamic) to motion that is applied to the motor.

Locked rotor When the lag/lead limit is reached, a timer starts a countdown that is determined by the user. The locked rotor will assert itself by triggering a flag and, depending on the selected mode, by disabling the output bridge.

Loss of synchronization In traditional stepper systems, when the lead/lag relationship of the rotor and stator reaches two full motor steps, the alignment of the magnetic fields is broken and the motor will stall in a freewheeling state. HMTechnology eliminates this.

Microstepping A control electronic technique that proportions the current in a stepper motor's windings to provide additional intermediate positions between poles. Produces smooth rotation over a wide range and high positional resolution. Typically, step resolutions range from 400 to 51,200 steps per shaft revolution.

Motor phase current The available torque of a stepper motor is determined by the motor phase current. The higher the motor phase current the higher the torque.

Multidrop A communications configuration in which several devices share the same transmission line, although generally only one may transmit at a time. This configuration usually uses some kind of polling mechanism to address each connected device with a unique address code.

NEMA The acronym for the National Electrical Manufacturer's Association, an organization that sets standards for motors and other industrial electrical equipment.

Node guarding Monitoring of the connection with the slave at an interface for cyclic data traffic.

Open Loop System An open loop motion control system is where no external sensors are used to provide position or velocity feedback signals, such as encoder feedback of position.

V1.00, 04.2015

Opto-Isolated A method of sending a signal from one piece of equipment to another without the usual requirement of common ground potentials. The signal is transmitted optically with a light source (usually a Light Emitting Diode) and a light sensor (usually a photo-sensitive transistor). These optical components provide electrical isolation.

Parameter Device data and values that can be set by the user.

Persistent Indicates whether the value of the parameter remains in the memory after the device is switched off.

PLC Programmable logic controller

Position lead/lag The HMT circuitry continually tracks the position lead or lag error, and may use it to correct position.

Position make-up When active, the position make-up can correct for position errors occurring due to transient loads. The lost steps may be interleaved with incoming steps, or reinserted into the profile at the end of a move.

Power stage The power stage controls the motor. The power stage generates currents for controlling the motor on the basis of the positioning signals from the controller.

Pull-In Torque This is the maximum torque the stepper motor can develop when instantaneously started at that speed.

Pull-Out Torque This is the maximum torque that the stepper can develop once an acceleration profile has been used to “ramp” it to the target speed.

Quick Stop Function used to enable fast deceleration of the motor via a command or in the event of a malfunction.

Resolution The smallest positioning increment that can be achieved.

Resonance The frequency that a stepper motor system may begin to oscillate. Primary resonance frequency occurs at about one revolution per second. This oscillation will cause a loss of effective torque and may result in loss of synchronism. The designer should consider reducing or shifting the resonance frequency by utilizing half step or micro-step techniques or work outside the primary resonance frequency.

Rotor The moving part of the motor, consisting of the shaft and the magnets. These magnets are similar to the field winding of a brush type DC motor

Rotor Inertia The rotational inertia of the rotor and shaft.

RS485 Fieldbus interface as per EIA-485 which enables serial data transmission with multiple devices.

Sinking Current Refers to the current flowing into the output of the chip. This means that a device connected between the positive supply and the chip output will be switched on when the output is low.

Slew The position of a move profile where the motor is operating at a constant velocity

Sourcing Current Refers to the current flowing out of the output of the chip. This means that a device connected between the chip output and the negative supply will be switched on when the output is high.

Stall detection Stall detection monitors whether the index pulse is always correctly triggered at the same angle position of the motor shaft.

Stator The stationary part of the motor. Specifically, it is the iron core with the wire winding in it that is pressed into the shell of the frame. The winding pattern determines the voltage constant of the motor.

Torque ramp Deceleration of the motor with the maximum possible deceleration, which is only limited by the maximum permissible current. The higher the permissible braking current, the stronger the deceleration. Because energy is recovered up depending on the coupled load, the voltage may increase to excessively high values. In this case the maximum permissible current must be reduced.

Variable current control When active, variable current control will control the motor current as such to maintain the torque and speed on the load to what is required by the profile. This leads to reduced motor heating and greater system efficiency.

Warning If not used within the context of safety instructions, a warning alerts to a potential problem detected by a monitoring function. A warning is not a fault and does not cause a transition of the operating state. Warnings belong to error class 0.

Watchdog Unit that monitors cyclic basic functions in the product. Power stage and outputs are switched off in the event of faults.

Zero crossing The point in a stepper motor where one phase is at 100% current and the other is at 0% current.

V1.00, 04.2015

WARRANTY

Reference the web site at www.motion.schneider-electric.com for the latest warranty and product information.

USA SALES OFFICES

East Region
Tel. 610-573-9655
e-mail: e.region@imshome.com

Northeast Region
Tel. 860-368-9703
e-mail: n.region@imshome.com

Central Region
Tel. 630-267-3302
e-mail: c.region@imshome.com

Western Region
Tel. 602-578-7201
e-mail: w.region@imshome.com

EUROPEAN SALES MANAGEMENT
Tel. +33/4 7256 5113 – Fax +33/4 7838 1537
e-mail: europe.sales@imshome.com

TECHNICAL SUPPORT
Tel. +00 (1) 860-295-6102 – Fax +00 (1) 860-295-6107
e-mail: etech@imshome.com

Schneider Electric Motion USA
370 N. Main Street
Marlborough, CT 06447 USA

www.motion.schneider-electric.com

Owing to changes in standards and equipment, the characteristics given in the text and images in this document are not binding until they have been confirmed with us.
Print: Schneider Electric Motion USA
Photos: Schneider Electric Motion USA

Date : 04 / 2015

© Schneider Electric Motion USA All Rights Reserved.
Product Disclaimer and most recent product information online.