MDMst

Installation Guide
For PCB Mount

May 2024
Document Revision 3.14.01

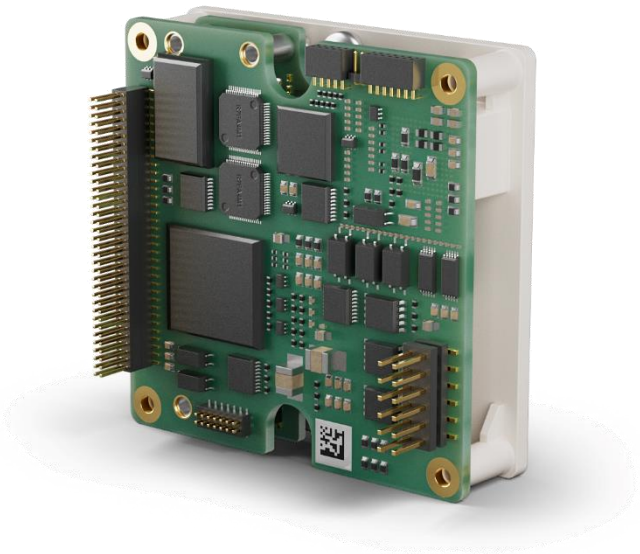

MDMst PCB Mount

Release Date: May 2024

COPYRIGHT

© ACS Motion Control Ltd., 2024. All rights reserved.

Changes are periodically made to the information in this document. The most recent version of this document can be found on the ACS Motion Control website.

No part of this document may be reproduced in any form without prior written permission from ACS Motion Control.

TRADEMARKS

EtherCAT® is registered trademark and patented technology, licensed by Beckhoff Automation GmbH, Germany.

Any other companies and product names mentioned herein may be the trademarks of their respective owners.

PATENTS

Israel Patent No. 235022

US Patent Application No. 14/532,023

Europe Patent application No.15187586.1

Japan Patent Application No.: 2015-193179

Chinese Patent Application No.: 201510639732.X Taiwan (R.O.C.) Patent Application No. 104132118 Korean Patent Application No. 10-2015-0137612

www.acsmotioncontrol.com support@acsmotioncontrol.com sales@acsmotioncontrol.com

NOTICE

The information in this document is deemed to be correct at the time of publishing. ACS Motion Control reserves the right to change specifications without notice. ACS Motion Control is not responsible for incidental, consequential, or special damages of any kind in connection with using this document.

WARRANTY:

This product is warranted as described on the ACS Motion Control website at:

https://www.acsmotioncontrol.com/sales-and-warranty-terms/

Revision History

Table 1. Revision History		
Date	**Revision**	**Description**
May 2024	3.14.01	New document

Table of Contents

Revision History 3
Table of Contents 4
List of Figures 6
List of Tables 7
1 Safety Warnings 8
2 Compliance Markings 9
3 Conventions Used in this Guide 10
4 Related Documentation 11
5 Introduction 12
5.1 Document Scope 12
5.2 Product Overview 12
6 Safety and EMC 13
6.1 UL Installation 13
7 Installation Procedure 14
8 System Specifications 15
8.1 Supplies and Motors 15
8.2 Motor Feedback 16
8.3 STO and EtherCAT 20
8.4 Ordering Part Number 21
9 Control and Drive Power Supply Guidelines 22
10 MDMst PCB: Carrier Board Design Guidelines 23
10.1 MDMst PCB Carrier Board Mechanical Design Factors 24

Continued next page

10.2 MDMst PCB Carrier Board Electrical Design Factors 25
11 Connect to the MDMst PCB Mount 26
11.1 Power for Encoders 26
11.2 Motor Over-Temperature 26
11.3 J2 Motor Power Connector 27
11.4 J3 Signals Connector 31
11.4.1 J3 Signal Connections 32
12 Installation and Power Up 45
13 Setup the EtherCAT Network 46

List of Figures

Figure 1. MDMst PCB Mount 12
Figure 2. MDMst PCB Mounting Dimensions and Connectors (in mm) 23
Figure 3. MDMSt PCB Mount Connectors 26
Figure 4. Connector J2 Pinout 27
Figure 5. J2 Motor Power Connection 28
Figure 6. J2 Motor Drive Connection: Single-Phase 29
Figure 7. J2 Motor Drive Connection: Two-Phase (2-phase typically refers to stepper motor) 29
Figure 8. J2 Motor Drive Connection: Three-Phase 30
Figure 9. Connector J3 Pin Functions 31
Figure 10. J3: Incremental Digital Encoder (AQB) Input 35
Figure 11. J3: Incremental Digital Encoder (CLK-DIR) Connection 36
Figure 12. J3: SIN-COS Encoder Connection 36
Figure 13. J3: Absolute Encoder (CLK-DATA) Connection 37
Figure 14. J3: Absolute Encoder Connection 37
Figure 15. J3: Hall Sensor Inputs Connection 38
Figure 16. J3: Left and Right Limit Source Connection 39
Figure 17. J3: Left and Right Limit Sink Connection 40
Figure 18. J3: STO Connection 41
Figure 19. J3: MTMP Motor Temperature Sensor Connection 42
Figure 20. J3: MARK Input Connection 42
Figure 21. J3: PEG Outputs 43
Figure 22. J3: GP Analog I/O Input Connections 44
Figure 23. J3: Control Supply Connection 44

List of Tables

Table 2. Safety Symbols....8
Table 3. Compliance Markings....9
Table 4. Conventions....10
Related Documentatiomn....11
Table 5. Related Documentation....11
Table 6. MDMst PCB Mount Installation Procedure....14
Table 7. Control Supply Input....15
Table 8. Drive Supply Input....15
Table 9. Motor Drive Output....15
Table 10. Incremental Digital Encoder....16
Table 11. SIN-COS Encoder (Optional)....17
Table 12. Absolute Encoder....17
Table 13. Digital Hall Sensor Inputs....18
Table 14. Limit Inputs....18
Table 15. MARK Inputs....18
Table 16. PEG Outputs....18
Table 17. GP Analog Inputs....19
Table 18. Motor Over Temperature....19
Table 19. STO....20
Table 20. EtherCAT Ports....20
Table 21. Power Losses and Operational Temperature....20
Table 22. Product and Software / Firmware Compatibility....20
Table 23. Power SupplyGeneral Selection Guidelines....22
Table 24. MDMst PCB Carrier Board Mechanical Design Factors....24
Table 25. MDMst PCB Carrier Board Electrical Design Factors....25
Table 26. J2 Motor Power Mating Connector Details....27
Table 27. J2 Motor Power Connections....28
Table 28. J3 Signals Connector....31
Table 29. J3 Signal Connections....32
Table 30. MDMst PCB Mount Installation and Power Up....45

1 Safety Warnings

This guide uses the following safety symbols to alert the user to possible safety and equipment hazards.

Table 2. Safety Symbols	
Symbol	**Meaning**
	Warning symbol alerting the user to a possible personal injury hazard
	Warning symbol alerting the user to a possible electrical shock hazard
	Warning symbol alerting user of possible equipment damage.

2 Compliance Markings

The MDMst complies with the standards listed below and bears the associated compliance marks.

Table 3. Compliance Markings	
Mark	**Meaning / Standards**
CE	Conformité Européene (European Conformity) (pending)
	Electrical Safety: IEC 61500-5-2
	EMC (Electromagnetic Compatibility): IEC 61800-3
UKCA	UK Conformity Assessed (Pending)
	EMC: IEC 61800-3
UL Recognized Product	The UL Recognized mark on an ACS Motion Control product indicates that it has fulfilled the requirements required as a component of drive applications and is appropriately listed.
TÜVRheinland CERTIFIED	Technischer Überwachungsverein (English: Technical Inspection Association
	STO & SS1 Functional Safety: IEC 61508, IEC 61800-5-2

3 Conventions Used in this Guide

Table 4. Conventions	
Text	**Description**
NOTE	Information related to a topic.
Bold	Names of GUI objects or commands
Italics	Names of other documents
Blue	Hyperlink
>>	Navigation through a menu.

4 Related Documentation

The documents listed below provide additional information related to the MDMst.

Authorized users can download the latest versions of these documents from:

https://www.acsmotioncontrol.com/resources/.

Table 5. Related Documentation

Document	Description
SPiiPlus ACSPL+ Programmer's Guide	Provides practical instruction on how to use ACSPL+ to program your motion controller.
SPiiPlus Command & Variable Reference Guide	Describes all the variables and commands available in the ACSPL+ programming language.
SPiiPlus MMI Application Studio User Guide	Explains how to use the SPiiPlus MMI Application Studio and associated monitoring tools.
SPiiPlus Quick Start Guide	Provides guidance on how to configure and adjust the SPiiPlus systems to work with supported types of motors and feedback devices.
Using Absolute Encoders with ACS Products Application Note	Addresses the physical connections, configuration and operation of absolute encoders with ACS networking products.
Safe Torque Off Function Application Note	Describes how to implement the SS1-t/STO function for drives installed in ACS Motion Control systems.
Autofocus Control Application Note	Provides details for implementing Autofocus

5 Introduction

5.1 Document Scope

This document provides detailed information for installing the MDMst PCB Mount. It is intended for engineers and technicians experienced in installing and commissioning motion control systems.

5.2 Product Overview

The MDMst is an economical single axis EtherCAT drive with a very small footprint. This PWM drive works as a slave to any ACS EtherCAT master.

The MDMst is fed by two power supplies provided by the customer;

- 24 Vdc for control power
- 12-48 Vdc for motor drive power.

The PCB mount version can be mounted onto a PCB carrier board (see MDMst PCB Carrier Board Mechanical Design Factors on page 24).

The MDMst PCB Mount has two standard header connectors to connect the drive to a PCB carrier board, designed by the user. 0 below shows the MDMst PCB Mount.

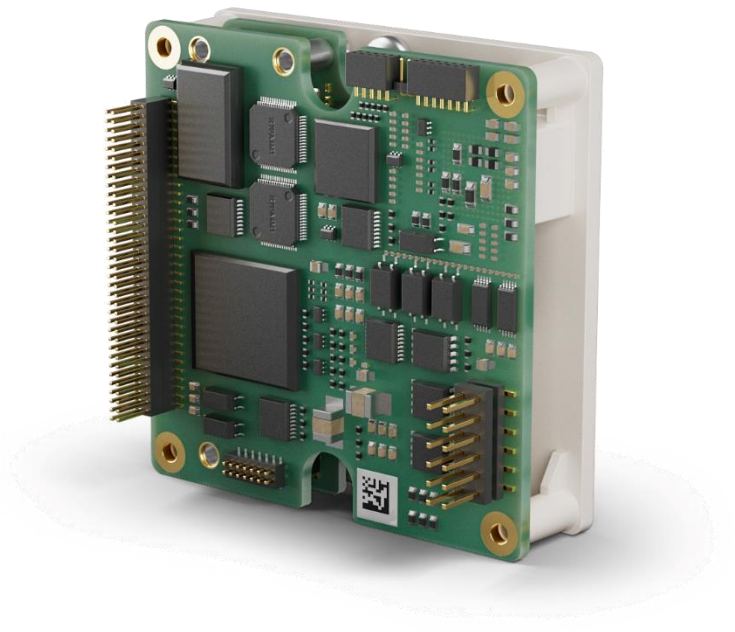

Figure 1. MDMst PCB Mount

6 Safety and EMC

Read this section carefully before beginning the installation process. Make sure that the following guidelines and procedures are addressed and observed prior to powering up.

An STO module (Safe Torque Off) is an optional feature of the unit (not provided with the product). Additional information can be found in the dedicated safety manual (future release).

Installation and maintenance must be performed only by qualified personnel who have been trained and certified to install and maintain high power electrical and electro-mechanical equipment, servo systems, power conversion equipment and distributed networks.

Ensure that all the attached power and signal cables are in good operating condition. Maintenance should be performed only after the relevant network devices have been powered down, and all associated and surrounding moving parts have settled in their safe mode of operation.

To avoid electric arcing and hazards to personnel and electrical contacts, avoid connecting and disconnecting the drive while the power source is on. When connecting the drive to an approved isolated control and drive supply, connect it through a line that is separated from hazardous live voltages using reinforced or double insulation, in accordance with approved safety standards.

The drive is not intended for use in safety-critical applications (such as life support devices) where a failure of the drive can reasonably be expected to cause severe personal injury or death.

Connectors J2 and J3 on the MDMst PCB Mount contain hazardous voltages up to 48Vdc.

Observe the following guidelines to ensure safe and proper wiring:

- Whenever possible, use shielded cables with braided shield of at least 80%-95% coverage.
- Proper wiring, grounding and shielding are essential for ensuring safe, dependable, and optimal servo performance.
- After completing the wiring, carefully inspect all wires to ensure tightness, good solder joints, and general safety.

6.1 UL Installation

- A 15A littelfuse p/n 0NLN015.T (or equivalent) should be installed between the output of the external drive supply and the MDMst.
- Motor over temperature protection shall be provided by the end user.
- Suitable For Use On A Circuit Capable Of Delivering Not More Than 5KA rms Symmetrical Amperes, 60Vdc Volts Maximum.
- The rated temperature range of operation of the MDMst is 0 to + 50° C. Above 40º C ambient, forced-air cooling of 8.2 CFM should be used to cool the drive.

7 Installation Procedure

Read this Installation Guide thoroughly before installation and setup of the MDMst PCB Mount.

Table 6. MDMst PCB Mount Installation Procedure	
Step	**Action**
1	Become familiar with the System Specifications. Go to: System Specifications on page 15
2	Select the Control and Drive power supplies: Go to: Control and Drive Power Supply Guidelines, page 22
3	Go to MDMst PCB: Carrier Board Design Guidelines on page 23
4	Go to Connect to the MDMst PCB Mount on page 26.
5	Go to Installation and Power Up on page 45.
6	Go to Setup the EtherCAT Network on page 46.
Installation Completed	

8 System Specifications

8.1 Supplies and Motors

Table 7. Control Supply Input	
Voltage range:	24 VDC ±5%
Maximum Input Current:	<1 A @ 22.8 VDC
Protection:	Reverse polarity, short circuit

Table 8. Drive Supply Input		
Voltage Range:	12-48 VDC	• **WARNING** Always connect the Drive supply to the MDMst with soft start. See the warning in Table 26. on page 27. • Use Littlefuse 15 A P/N 0NLN015.T or equivalent between the power supply and the MDMSt • There is no regeneration circuit in the MDMst. It is user's responsibility to assure the drive supply voltage will not exceed 55 V under any condition.
Maximum Input Current (continuous/peak, Arms)	4.3/8.6 A	
Input power per axis (continuous/peak, W)	205/412W	
Inrush current	50 A for 40µS @ 48 VDC	
Protections	Reverse polarity **NOTE:** The supply fuse will open in case of reverse polarity.	

Table 9. Motor Drive Output	
Designation	R, S, T
Quantity	1
Motor Drive Output Type	PWM three phase power bridge
Motor configuration	• 3-phase brushless • DC brush • 2 phase DC brushless • 2 and 3 phase step motors • Voice coil
Output Current (A)	5/10 continuous/peak sine amplitude **NOTE:** Peak current is for 1 second
Maximum output voltage (Vrms)	33 V phase to phase
Continued next page	

Motor Drive Output, Continued	
PWM frequency (Khz)	20 Khz
Output power (W)	196/386 (continuous/peak)
Load inductance	>12 uH Phase @ 24 VDC
Electrical motor's time constant	100 uS
Protections	Short and over current: 15 A Over temperature: 100ºC (on the product's PCB) Under voltage: 9 V±3% Over voltage: 56 V±3%
Efficiency	>98%
Regeneration	No

8.2 Motor Feedback

The MDMst supports three types of encoders:

- Incremental digital encoders (AqB), standard on all MDMst models
- Analog SinCos (optional)
- Absolute encoders (optional)

Table 10. Incremental Digital Encoder	
Designation	A: #_CHA± B: #_CHB± I: #_CHI±
Quantity	1
NOTE	Multi-channel feedback is not available with the MDMst.
Interface	Differential, RS422
Maximum input frequency	50M counts per second **NOTE:** 12.5 MHz A & B input frequency appropriate to 50 million quadrature counts per second.
Input termination	120 Ω **NOTE:** On each signal pair
Protection	Encoder not connected, encoder error
Encoder supply	5.1-5.15 V, 0.5 A total for all digital encoders.

Table 11. SIN-COS Encoder (Optional)	
NOTE	**Connecting to the SIN-COS connections makes the analog inputs unavailable.** The SIN-COS inputs share the same internal circuitry in the MDMst as the analog inputs.
Designation	#_SIN± #_COS± #_SC_I±
Format	SIN, COS and Index
Quantity	1
Type	Differential input Input impedance 120 Ω ±10%. Encoder voltage range 1 Vp-p±10% Input Voltage range: 1.20 Vp-p
Maximum frequency	500 kHz
Encoder output supply	5.1-5.15 V, 0.5 A total for all analog encoders.
Squared SIN-COS	The squared signals of the SIN-COS are available.
ADC resolution	12-bit
Diagnostics	Encoder error and encoder not connected.
Compensation	Phase, Gain and offset

Table 12. Absolute Encoder	
Designation	#_CHA #_CHB
Quantity	1
Type	• EnDat2.1, 2.2 Heidenhain, based on ROQ 437 SERIES • Smart-Abs: Tamagawa, based on: SA35-17/33bit-LSP-5 V • BiSS-B/C • Panasonic: based on AC Servo Motor MINAS A4/A6 Series
Maximum input frequency	• EnDat- 2 MHz • Smart-Abs-2.5 MHz • Biss-C- 10MHz • Panasonic- 2.5 MHz
Interface	Differential RS485
Encoder supply	5.1-5.15 V, 0.5 A total for all digital encoders.

Table 13. Digital Hall Sensor Inputs	
Designation	#_HA #_HB #_HC
Quantity	One set
Interface	5 V, Source input type, (open cathode). Reference DGND
Input current	< 7 mA current.

Table 14. Limit Inputs	
Designation	#_RL #_LL
Quantity	2 per axis
Interface	Single-ended, 5±20%, opto-isolated, sink/source. Refer to: • Figure 16 on page 39 • Figure 17 on page 40
Behavioral	No current= limit off.
Input current	<14 mA.

Table 15. MARK Inputs	
Designation	MARK± **NOTE:** Can be used as a general-purpose digital input.
Quantity	1
Interface	Differential RS422
Maximum encoder frequency	<12.5MHz
Maximum capture Frequency	50 Hz for 1 Khz MPU cycle 250 Hz 5 Khz MPU cycle

Table 16. PEG Outputs	
Designation	PEG0± **NOTE:** can be used as a fast GP output.
Quantity	1
Interface	Differential, RS422 compatible.
Maximum frequency	10 Mhz
Pulse width	26.7 ns to 1.745 ms

Table 17. GP Analog Inputs	
Designation	AIN_#±
Quantity	2
Interface	Differential input, ±10 V±5%
Maximum input frequency	500 KHz
Resolution	12-bit
Offset	<100 mV
SNR	>54 dB

Table 18. Motor Over Temperature	
Designation	Motor over temperature: #_OVER_T
Quantity	1
Type	Single-ended, opto-isolated, reference to DGND
Threshold (ON / OFF)	**ON**: Impedance between _Motor_OVER pin to ground is > 10 KΩ. **OFF:** Impedance between _Motor_OVER pin to ground is < 1 KΩ. If this input is NOT USED, connect it to DGND.
Default state	Over temperature off = Low impedance < 1K Ω

8.3 STO and EtherCAT

Table 19. STO	
NOTE	For information on implementing and testing STO, please refer to Application Note Safe Torque Off Function at the ACS Motion Control website: https://www.acsmotioncontrol.com/resources/download/an-sto-safe-torque-off-function/
Designation	STO1_5 V± STO2_5 V± **NOTE:** External safety controller / PLC or STO card required. See the **NOTE** above.
Quantity	2 inputs. When 5 V turns OFF, PWM switches OFF immediately. One shuts off the upper part of the motor bridge and one the lower part.
Interface	5 Vdc non-isolated, two terminals for each input, reference DGND.
Input current (per input pin)	< 20 mA
Behavior	No current = drive off.

Table 20. EtherCAT Ports	
Designation	Transmit: ETH#_TX± Receive: ETH#_RX±
Quantity	2
Interface	EtherCAT protocol
Speed	100 Mbps
EtherCAT cycle rate	Up to 10 kHz

Table 21. Power Losses and Operational Temperature	
Bridge Power Loss	4.5 W (98% efficiency)
Rated Operating Temperature Range	0º C to +50º C
NOTE	Above 40º C, forced-air cooling at 8.2 CFM should be used.

Table 22. Product and Software / Firmware Compatibility	
Product Name	MDMst PCB Mount
Product Revision	A
Software	SPiiPlus ADK Suite
First Release	Version 3.14.01
Last Release Version	Current

8.4 Ordering Part Number

MDMxx-1-048-05-XXXXXXX

Product Family

MDM	Mini universal Drive Module

Sub-family

st	standard servo processor module

Number of axis

Max voltage (table)

048	12-48 VDC

Max cont. current (A)

05	5 A

Reserved (NNN)

Mounting options

N	Board level mount
A	Panel mount with DIN rail option

Number of Absolute Encoder Channels

0	No absolute encoder
1	1channel of absolute encoder

Reserved (0)

Number of SinCos Encoder Channels up to 500 kHz

0	No Sin/Cos encoder
1	1channel of Sin/Cos encoder up to 500kHz

Example for MDMst:

MDMst-1-048-05-100NNNN

Standard Performance single axis 12-48V, 5A/10A, 1 Sin/Cos 500kHz Encoder channel, no absolute encoder, and board mount

9 Control and Drive Power Supply Guidelines

The MDMst PCB Mount requires two external power supplies:

- Control Power Supply (24 Vdc)
- Motor Power Supply (12 – 48 Vdc)

The table below provides guidelines for selecting these external power supplies.

Table 23. Power SupplyGeneral Selection Guidelines	
The power supply must be isolated.	
The power supply must be CE and UL approved.	
The power supply must be short circuit protected.	
The power supply must have very low noise and ripple.	
Control Supply Only	
Example Power Supply: An example of a suitable 24V/50W control power supply is the XP Power P/N VCS50US24 supply.	
Drive Supply Only	
⚠WARNING	Always connect the Drive supply to the MDMst with soft start. Connect the Drive supply to the MDMst BEFORE applying AC power to 48v power supply.
Ripple: Measure the ripple next to the drive supply connector and verify that the ripple is less than 1V during motion. If the ripple is higher, an external capacitor of 2000 uF, installed as close as possible to the drive (no further than 20 cm from the drive), can help reduce power bus current ripple. Use a capacitor whose working voltage is compatible with the drive supply output maximum.	
Regeneration: There is no regeneration circuit in the MDMst. It is the user's responsibility to make sure that the DC drive supply voltage will not exceed 52 Vdc.	
Peak Current: The drive power supply must be able to provide the peak current required by the motor (inductive load).	
Fuse: Use 15 A Littlefuse P/N 0NLN015.T or equivalent between the power supply and the MDMSt.	
Example Power Supply: The HPU1K5PS48 by XP Power is an example of a 48 Vdc/1500 W drive power supply.	

10 MDMst PCB: Carrier Board Design Guidelines

The MDMst PCB is designed to be mounted onto a customer-supplied *carrier board*. The carrier board must include the following features:

- Four holes to mechanically secure the MDMst PCB with appropriate hardware (screws, nuts, lockwashers). See Figure 2 below.
- Two connectors (see Figure 2**)** to mate with:
    - J2: Motor Power, 12-pin male header
    - J3: Signals, 70-pin male header

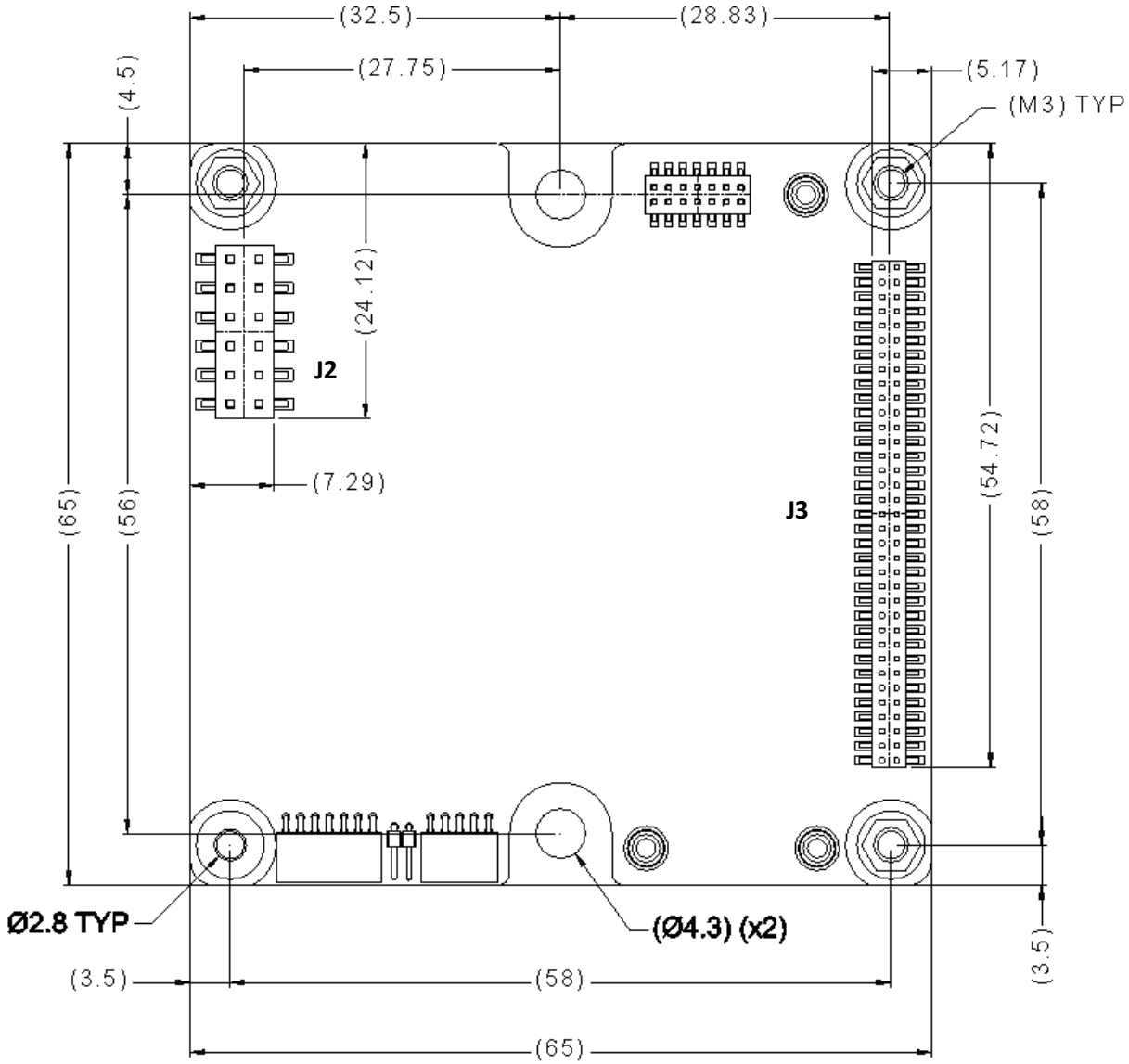

Figure 2. MDMst PCB Mounting Dimensions and Connectors (in mm)

10.1 MDMst PCB Carrier Board Mechanical Design Factors

Table 24. MDMst PCB Carrier Board Mechanical Design Factors	
The carrier board must be at least 2.5 mm thick to insure mechanical stability and easy plug-in and out of the MDMst connectors.	
Observe industry standard practices for circuit layout.	
Design the carrier board to ensure the temperature of the carrier board will not exceed 100°C under any condition.	
NOTE	The MDMst operational temperature range is 0-50°C. Above 40°C ambient, forced-air cooling of 8.2CFM should be used.
Traces between the MDMst module and the end use connectors must be as short as possible.	

10.2 MDMst PCB Carrier Board Electrical Design Factors

Table 25. MDMst PCB Carrier Board Electrical Design Factors
Traces to connectors that connect to the MDMst PCB connectors must be as short as possible to minimize EMI.
Observe industry standard practices for circuit layout.
VOLTAGE SPIKE PROTECTION: Install a Transient Voltage Suppression (TVS) device between 48 VDC and ground, located as close as possible to J2. Recommended devices are Bournes TVS p/n SMAJ48A or equivalent.
Use ground planes wherever possible to minimize the inductance and the temperature of the traces.
Avoid cross talk between grounds.
Use a ground plane under the component-side and in last layer before print-side to protect the signals from EMI and to avoid radiated emission.
Clearance and creepage between the high voltage circuit and the low voltage circuits must adhere to UL61800-5-1 and EN61800-5-1.
The high-power traces must be kept as far away as possible from the feedback, control, and communication traces.
The carrier design should comply with related safety and EMC standards.
Use internal ground planes to avoid cross talk between signals inside a group.

11 Connect to the MDMst PCB Mount

All electrical connections to the MDMst PCB Mount are through connectors:

- J2 Motor Power
- J3 Signals.

Figure 3 below shows the MDMst PCB Mount connectors and their pinouts. Use this information, along with the information in the following sections, when designing the carrier board.

11.1 Power for Encoders

The MDMst PCB Mount has an internal 5 Vdc supply available for all encoders. The internal supply is limited to 0.5 A. Total encoder current consumption may exceed this value. Including a 5 Vdc power supply on the carrier board to supply the encoders is recommended. The MDMst PCB contains a 120 Ω termination for all Incremental digital encoder and analog SIN-COS encoder signals. Additional external termination is not required.

11.2 Motor Over-Temperature

The MDMst PCB Mount can be supplied with a signal that the motor is overheated. The user can define the response of the controller. The default response is no action. See Table 18. On page 19.

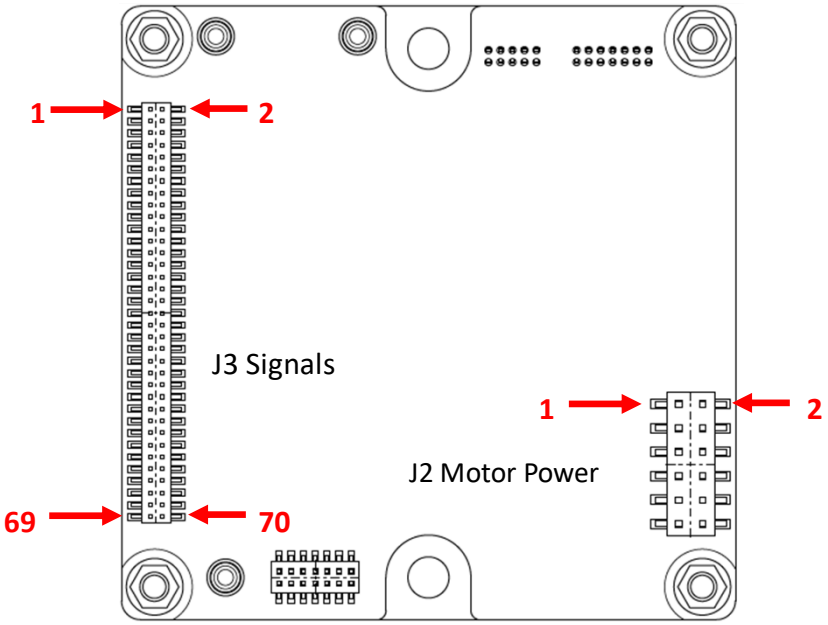

Figure 3. MDMSt PCB Mount Connectors

11.3 J2 Motor Power Connector

Connector J2 on the MDMst PCB Mount is a 12-pin male header. A female header connector must be included in the design of the carrier board to mate with J2.

This section provides details for MDMst PCB connector J2. Use this information in the design of the carrier board for the MDMst PCB.

Table 26. below shows details for a mating connector for J2.

Figure 4 below shows the pinout of J2.

Table 27. on the next page provides details of the connections to J2.

The schematics on the following pages of this section show how to connect various motor configurations to J2.

Table 26. J2 Motor Power Mating Connector Details		
Mating Connector Parts		
MFR	**MFR P/N**	**Description**
Weitron	625-0640-10-1B-2-10	Connector, 12 pins, 2.54mm, header (female) 2-rows
NOTE	The specifications above for a mating connector for J2 can be used for any connector with the same electrical and physical specifications.	
⚠WARNING	Always connect the Drive supply to the MDMst with soft start. Connect the Drive supply to the MDMst BEFORE applying AC power to 48v power supply.	

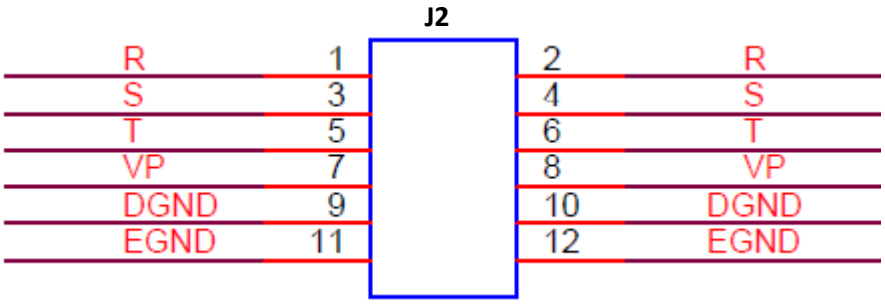

Figure 4. Connector J2 Pinout

Table 27. J2 Motor Power Connections		
Pin	**Name**	**Description**
1	R	Motor phase R
2	R	Motor phase R
3	S	Motor phase S
4	S	Motor phase S
5	T	Motor phase T
6	T	Motor phase T
7	VP	12-48 Vdc drive supply (see **NOTE** below)
8	VP	12-48 Vdc drive supply
9	VP_RTN	Drive supply return
10	VP_RTN	Drive supply return
11	EGND (PE)	Protected earth (shield)
12	EGND (PE)	Protected earth (shield)
NOTE	A Transient Voltage Suppressor (TVS) should be connected between VP and VP_RTN to mitigate voltage spikes on the 48 V supply. A Littlefuse P/N SMAJ48A or equivalent should be used. See Figure 5 below.	

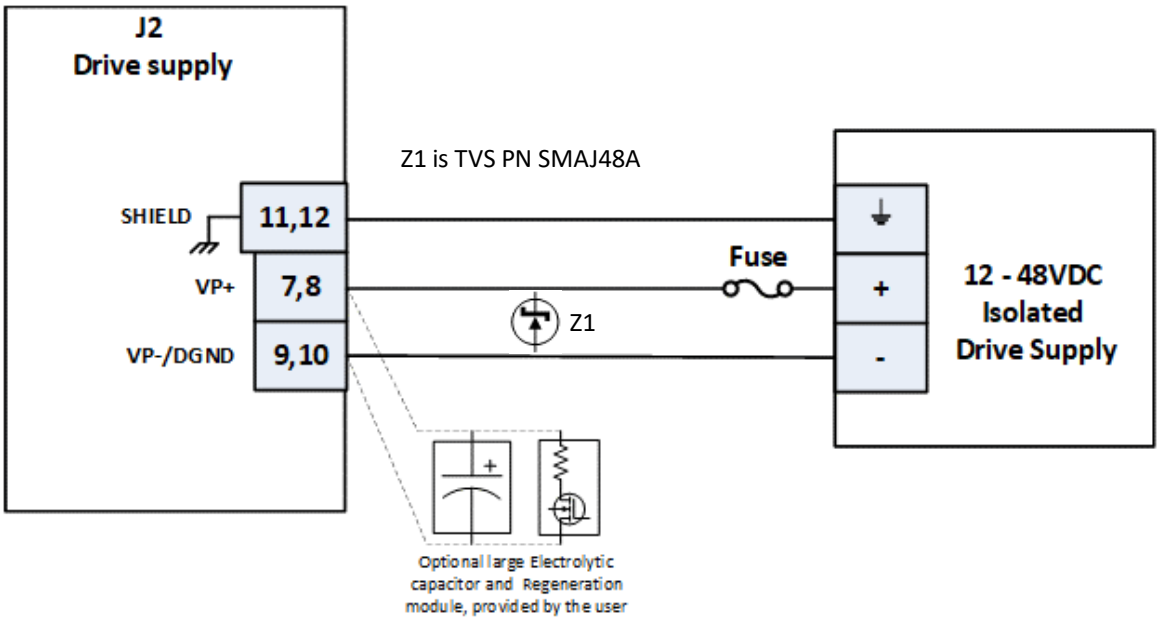

Figure 5. J2 Motor Power Connection

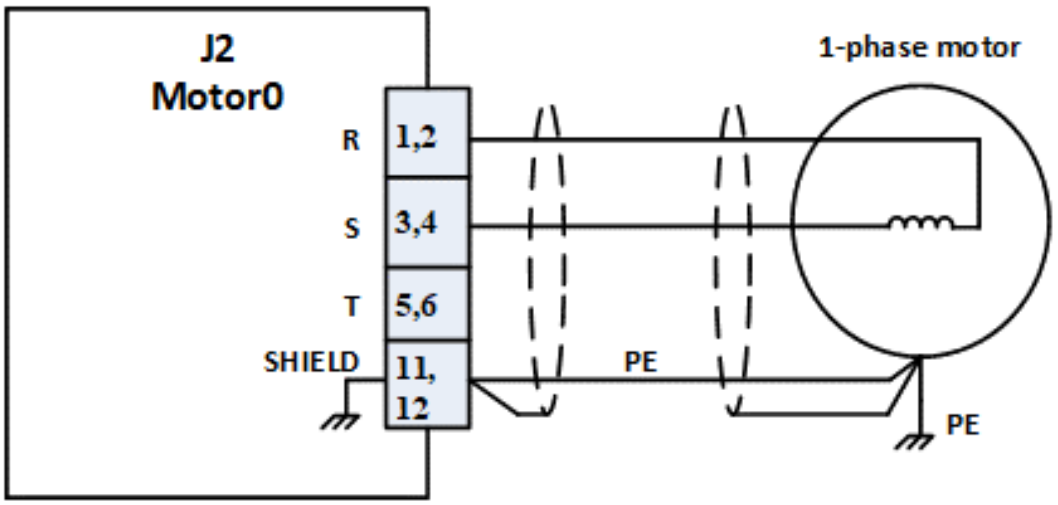

Figure 6. J2 Motor Drive Connection: Single-Phase

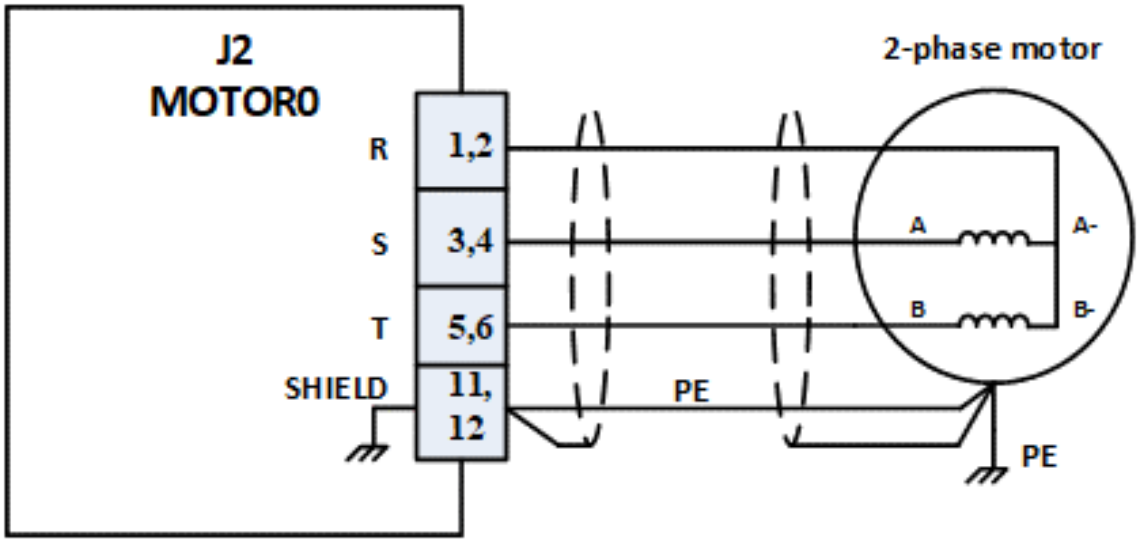

Figure 7. J2 Motor Drive Connection: Two-Phase (2-phase typically refers to stepper motor)

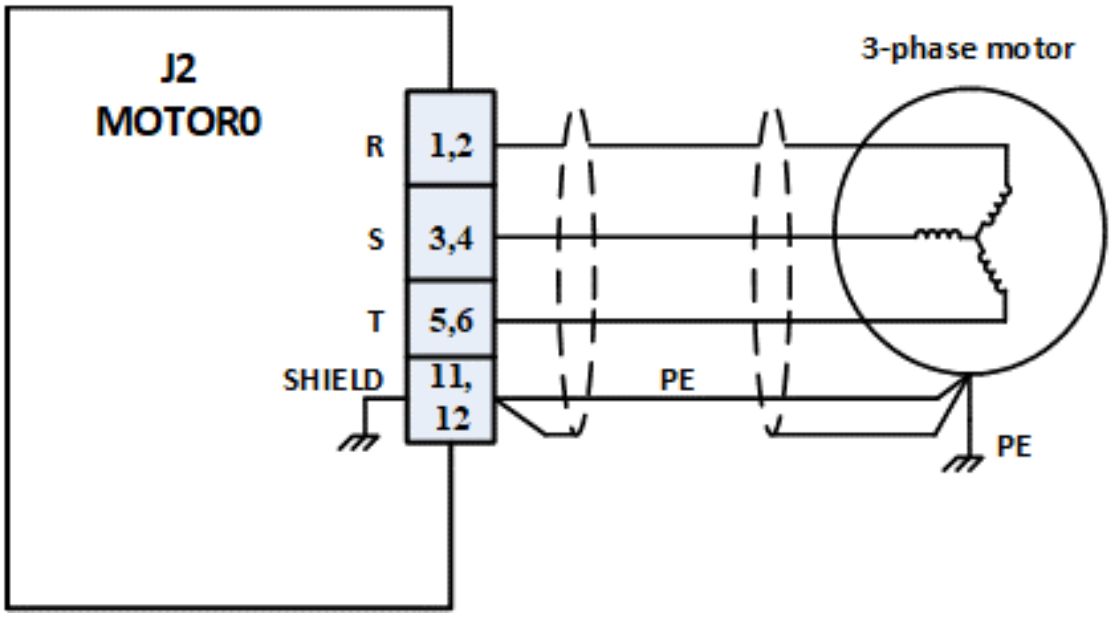

Figure 8. J2 Motor Drive Connection: Three-Phase

11.4 J3 Signals Connector

Connector J3 on the MDMst PCB Mount is a 70-pin male header. A female header connector must be included in the design of the carrier board to mate with J3.

This section provides details for MDMst PCB connector J3. Use this information in the design of the carrier board for the MDMst PCB.

Table 28. J3 Signals Connector		
Mating Connector Parts		
MFR	**MFR P/N**	**Description**
Weitron	606-1-352-10-1-2-00	70 pins, 1.27 mm, header (female) 2-rows
NOTE	The specifications above for a mating connector for J3 can be used for any connector with the same electrical and physical specifications.	

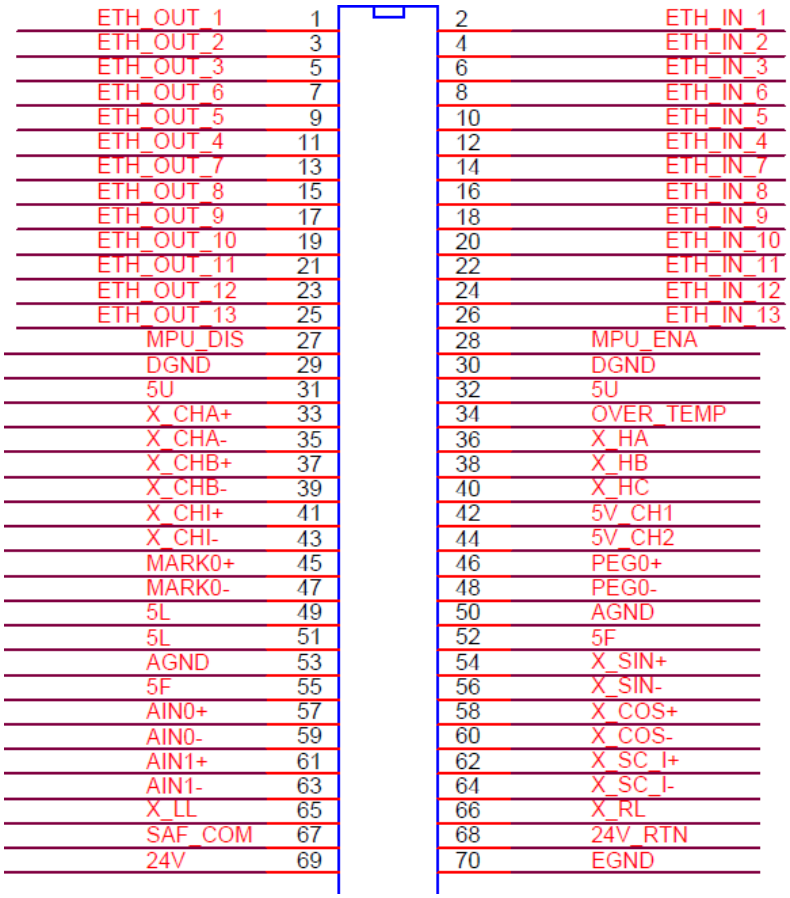

Figure 9. Connector J3 Pin Functions

11.4.1 J3 Signal Connections

Table 29. J3 Signal Connections		
Pin	**Name**	**Description**
1	ETH_OUT_1	EtherCAT OUT, positive transmit signal (TD+), connect it to pin #1 on the RJ45 out connector.
2	ETH_IN_1	EtherCAT IN, positive transmit signal (TD+), connect it to pin #1 on the RJ45 in connector.
3	ETH_OUT_2	EtherCAT OUT, negative transmit signal (TD-), connect it to pin #2 on the RJ45 out connector.
4	ETH_IN_2	EtherCAT IN, negative transmit signal (TD-), connect it to pin #2 on the RJ45 in connector.
5	ETH_OUT_3	EtherCAT OUT, positive receive signal (RD+), connect it to pin #3 on the RJ45 out connector.
6	ETH_IN_3	EtherCAT IN, positive receive signal (RD+), connect it to pin #3 on the RJ45 in connector.
7	ETH_OUT_6	EtherCAT OUT, negative receive signal (RD-), connect it to pin #6 on the RJ45 out connector.
8	ETH_IN_6	EtherCAT IN, negative receive signal (RD-), connect it to pin #6 on the RJ45 in connector.
9	ETH_OUT_5	75Ω termination pin, connect it to RJ45 OUT connector pin #5.
10	ETH_IN_5	75Ω termination pin, connect it to RJ45 IN connector pin #5.
11	ETH_OUT_4	75Ω termination pin, connect it to RJ45 OUT connector pin #4.
12	ETH_IN_4	75Ω termination pin, connect it to RJ45 IN connector pin #4.
13	ETH_OUT_7	75Ω termination pin, connect it to RJ45 OUT connector pin #7.
14	ETH_IN_7	75Ω termination pin, connect it to RJ45 IN connector pin #7.
15	ETH_OUT_8	75Ω termination pin, connect it to RJ45 OUT connector pin #8.
16	ETH_IN_8	75Ω termination pin, connect it to RJ45 IN connector pin #8.
17	ETH_OUT_9	Connect this pin to RJ45 OUT body
18	ETH_IN_9	Connect this pin to RJ45 IN body
19	ETH_OUT_10	Link LED signal, RJ45 OUT connector, connect this pin to the anode of the LINK LED (no series resistor is needed)
20	ETH_IN_10	Link LED signal, RJ45 IN connector, connect this pin to the anode of the LINK LED (no series resistor is needed)
Continued next page		

J3 Signal Connections, Continued		
Pin	**Name**	**Description**
21	ETH_OUT_11	Link LED signal return, RJ45 OUT connector, connect this pin to the cathode of the LINK LED (no series resistor is needed)
22	ETH_IN_11	Link LED signal return, RJ45 IN connector, connect this pin to the cathode of the LINK LED (no series resistor is needed)
23	ETH_OUT_12	Logic supply ON LED, indicate that the internal logic supply is ok, connect this pin to anode of the logic supply LED (no series resistor is needed)
24	ETH_IN_12	RUN LED signal, RJ45 IN connector, connect this pin to the anode of the RUN LED (no series resistor is needed)
25	ETH_OUT_13	Logic supply ON LED return, indicate that the internal logic supply is ok, connect this pin to cathode of the logic supply LED (no series resistor is needed)
26	ETH_IN_13	RUN LED signal return, RJ45 IN connector, connect this pin to the cathode of the RUN LED (no series resistor is needed)
27	MPU_DIS	System LED, positive signal, connect it to 0603 SMT red SYSTEM LED anode, 511Ω series resistor is needed. The ground of the LED should be connected to DGND. This LED should be placed close to MPU_ENA LED. In case of bi-directional LED, connect this signal to anode of the RED LED.
28	MPU_ENA	System LED, negative signal, connect it to 0603 SMT green SYSTEM LED anode, 511 Ω series resistor is needed. The ground of the LED should be connected to DGND. This LED should be placed close to MPU_DIS LED. In case of bi-directional LED, connect this signal to anode of the GREEN LED.
29	DGND	Digital ground. This ground is the ground for all low-level signals.
30	DGND	Digital ground. This ground is the ground for all low-level signals.
31	5U	5.1V digital encoder supply, 0.5A maximum total, Reference to DGND.
32	5U	5.1V digital encoder supply, 0.5A maximum total, Reference to DGND.
33	X_CHA+	Digital encoder, channel A non-inverted input, for differential encoder only. Absolute encoder Data+. Squared SIN mom-inverted output.
34	OVER_TEMP	Motor over temperature input, reference DGND.
35	X_CHA-	Digital encoder, channel A inverted input, for differential encoder only. Absolute encoder Data-. Squared SIN inverted output.
36	X_HA	Motor Hall A input
Continued next page		

J3 Signal Connections, Continued		
Pin	**Name**	**Description**
37	X_CHB+	Digital encoder, channel B non-inverted input for differential encoder only. Absolute encoder CLK+. Squared COS non-inverted output.
38	X_HB	Motor Hall B input
39	X_CHB-	Digital encoder, channel B inverted input for differential encoder only. Absolute encoder CLK-. Squared COS inverted output.
40	X_HC	Motor Hall C input
41	X_CHI+	Digital encoder, channel I (index) non-inverted input for differential encoder only
42	5V_CH1	STO 5V channel 1 input, connect this pin to STO card 5V output or to 5V PLC/safety controller output. Reference DGND. Connect this pin to 5V aux in case STO is not in use.
43	X_CHI-	Digital encoder, channel I (index) inverted input for differential encoder only
44	5V_CH2	STO 5V channel 2 input, connect this pin to STO card 5V output or to 5V PLC/safety controller output. Reference DGND. Connect this pin to 5V aux in case STO is not in use.
45	MARK0+	MARK 0 input non-inverted. Reference DGND.
46	PEG0+	PEG 0 output non- inverted. Reference DGND.
47	MARK0-	MARK 0 input inverted. Reference DGND.
48	PEG0-	PEG 0 output inverted. Reference DGND.
49	5L	5V aux supply, for GP use, up to 0.3A, reference DGND. Can be used to feed the 5V_CH1 and 5V_CH2 in case STO is not in used.
50	AGND	Analog ground. For low level analog circuits, like SIN-COS encoder.
51	5L	5V aux supply, for GP use, up to 0.3A, reference DGND. Can be used to feed the 5V_CH1 and 5V_CH2 in case STO is not in used.
52	5F	5.1V analog encoder supply, 0.5A maximum total, Reference to AGND.
53	AGND	Analog ground. For low level analog circuits, like SIN-COS encoder.
54	X_SIN+	Analog encoder SIN non-inverted input
55	5F	5.1V analog encoder supply, 0.5A maximum total, Reference to AGND.
56	X_SIN-	Analog encoder SIN inverted input
57	AIN0+	Analog input 0 non-inverted input
58	X_COS+	Analog encoder COS non-inverted input
59	AIN0-	Analog input 0 inverted input
Continued next page		

J3 Signal Connections, Continued		
Pin	**Name**	**Description**
60	X_COS-	Analog encoder COS inverted input
61	AIN1+	Analog input 1 non-inverted input
62	X_SC_I+	Analog encoder Index non-inverted input
63	AIN1-	Analog input 1 inverted input
64	X_SC_I-	Analog encoder Index inverted input
65	X_LL	Left limit input. Reference to SAF_COM.
66	X_RL	Right limit input. Reference to SAF_COM.
67	SAF_COM	Connect this pin to positive for sink LIMIT connection. Connect this pin to ground for sink LIMIT connection. The easiest way is to use 3-pin jumper. The LIMIT supply is isolated from DGND.
68	24V_RTN	24V control supply return input. This 24V is used to generate all low-level voltages needed for the drive's operation.
69	24V	24V control supply input. This 24V is used to generate all low-level voltages needed for the drive's operation.
70	EGND	Shield.
End of Table		

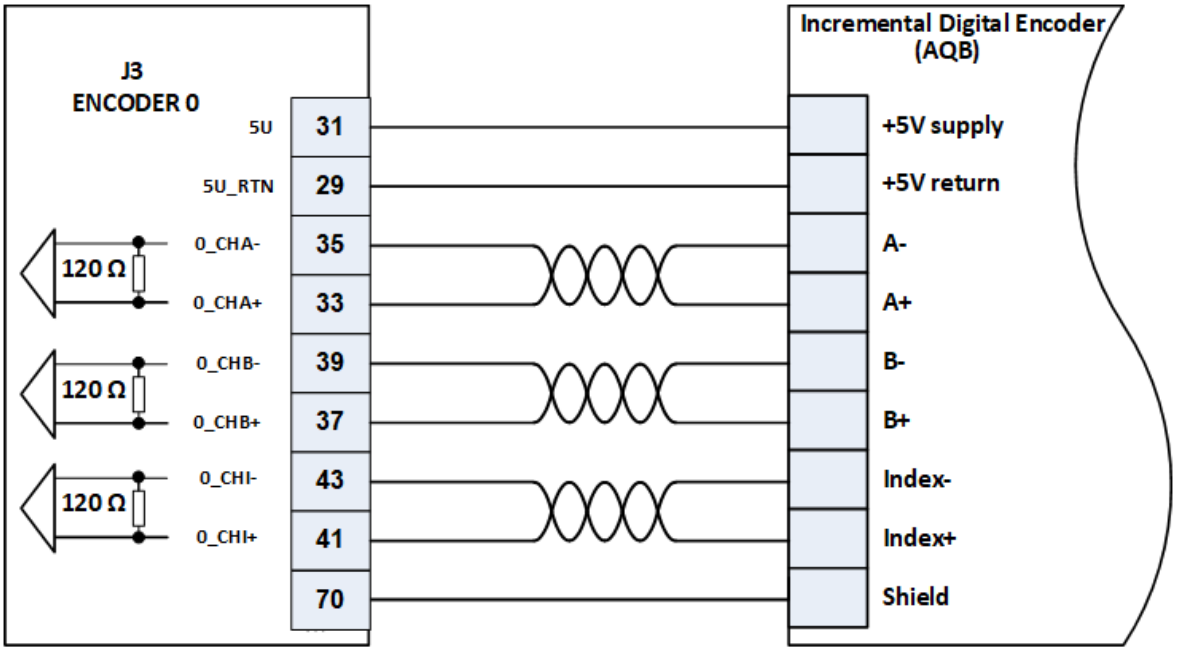

Figure 10. J3: Incremental Digital Encoder (AQB) Input

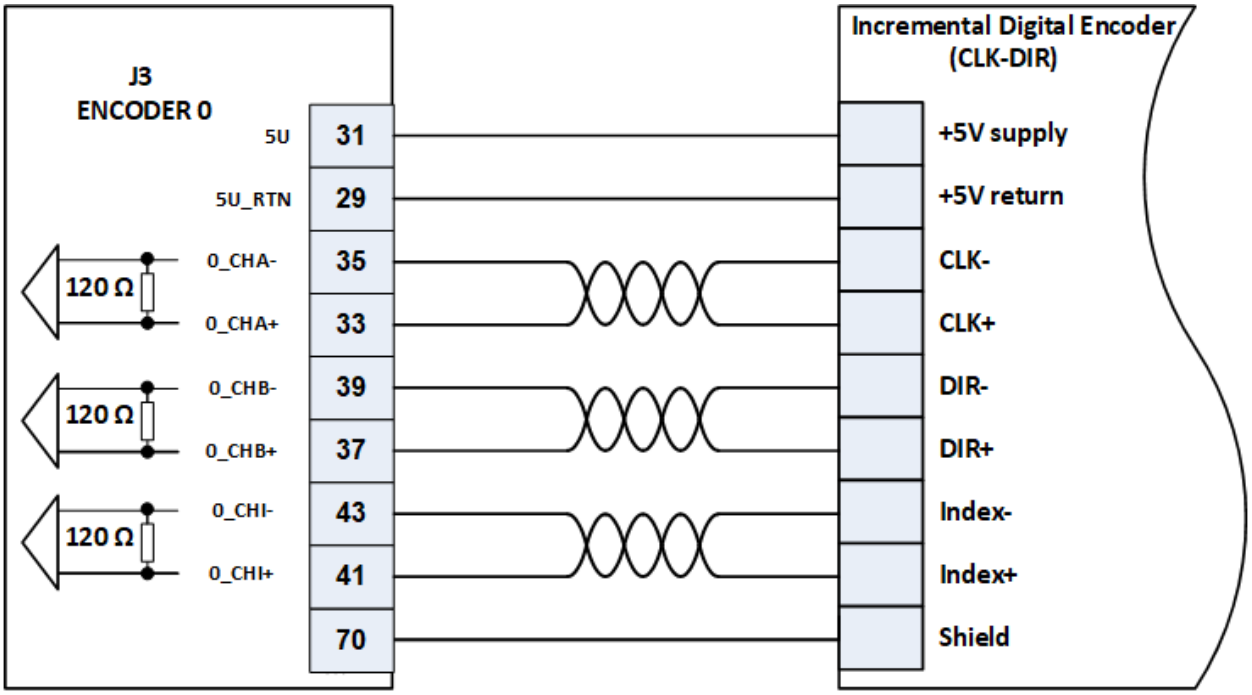

Figure 11. J3: Incremental Digital Encoder (CLK-DIR) Connection

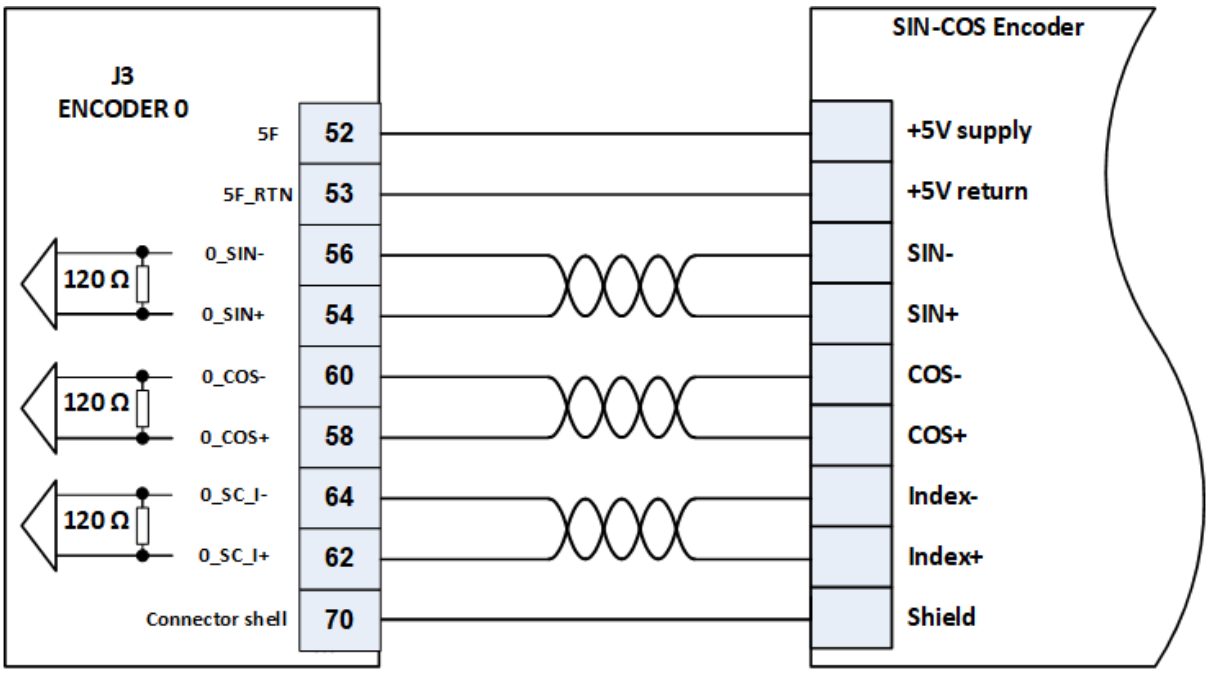

Figure 12. J3: SIN-COS Encoder Connection

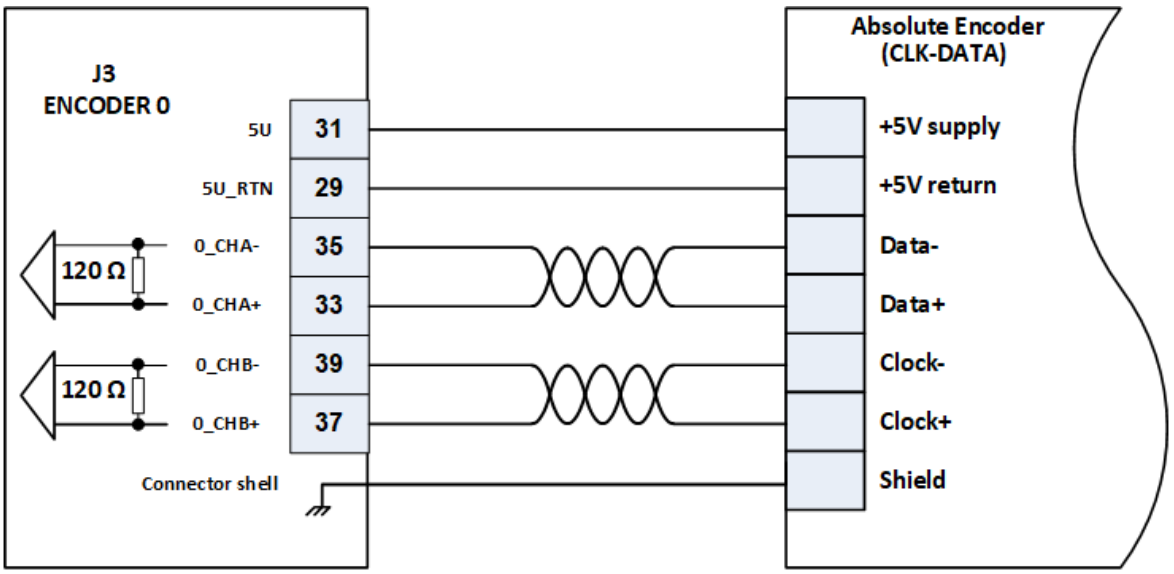

Figure 13. J3: Absolute Encoder (CLK-DATA) Connection

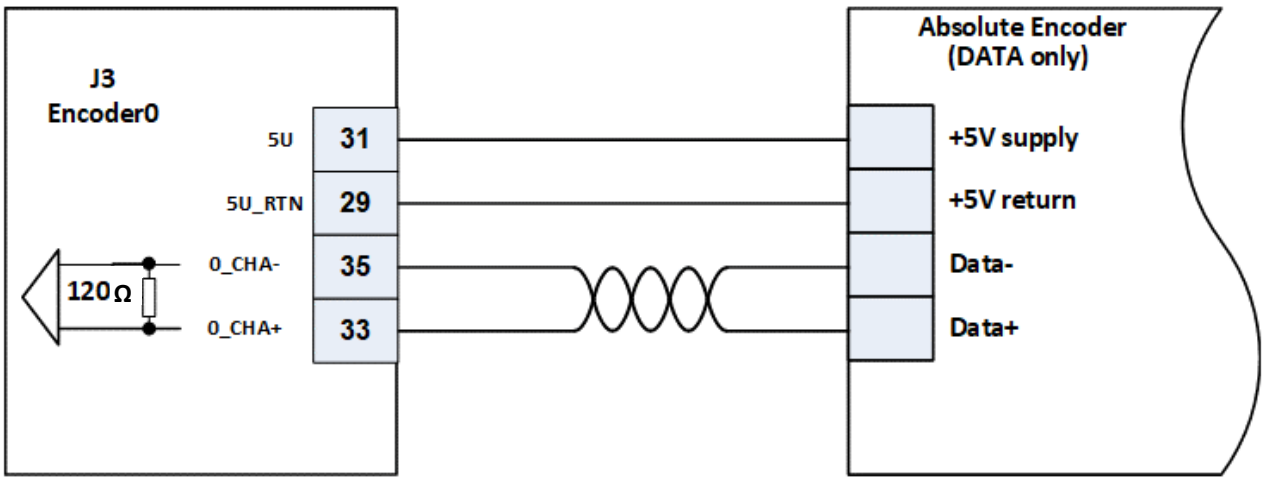

Figure 14. J3: Absolute Encoder Connection

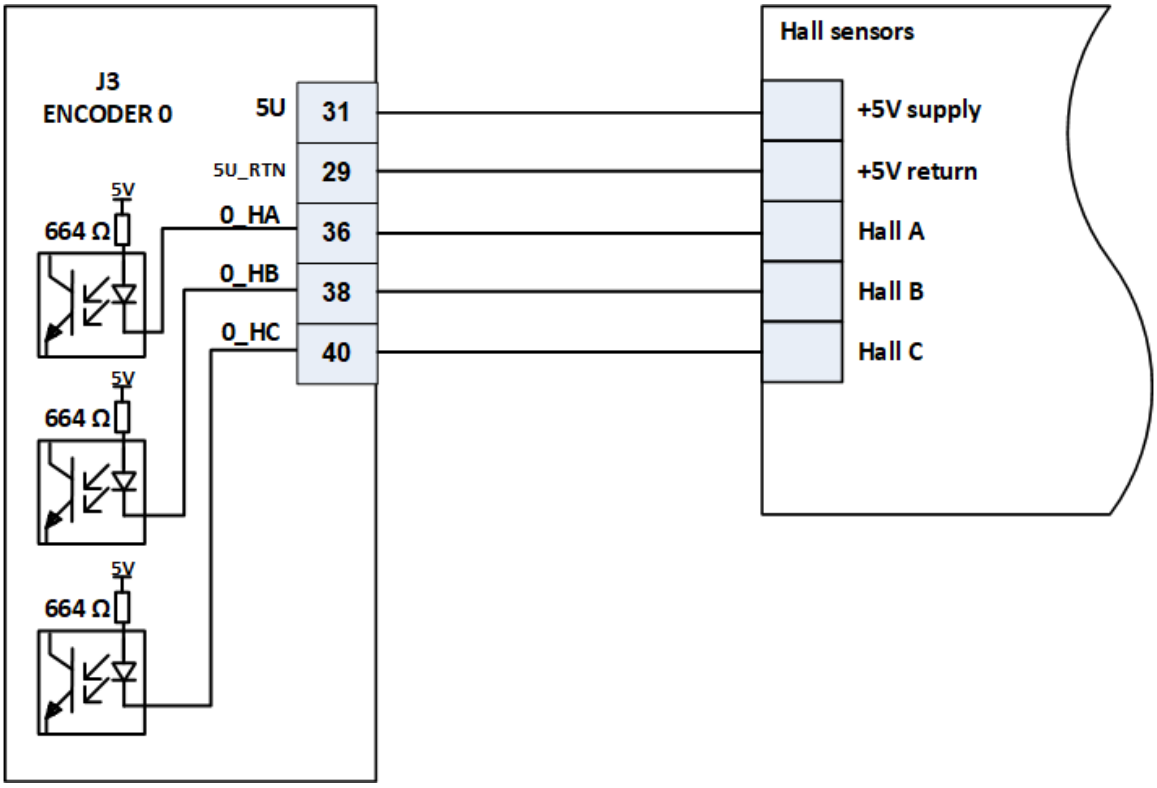

Figure 15. J3: Hall Sensor Inputs Connection

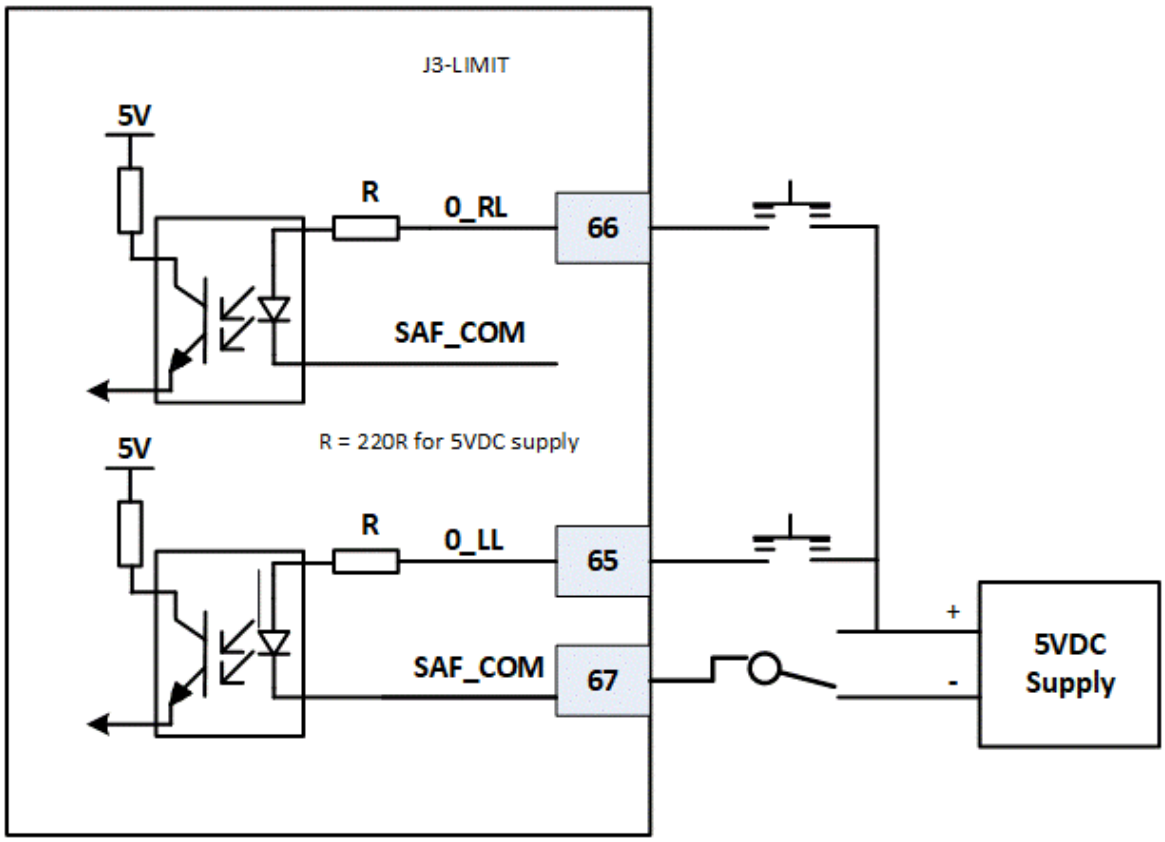

Figure 16. J3: Left and Right Limit Source Connection

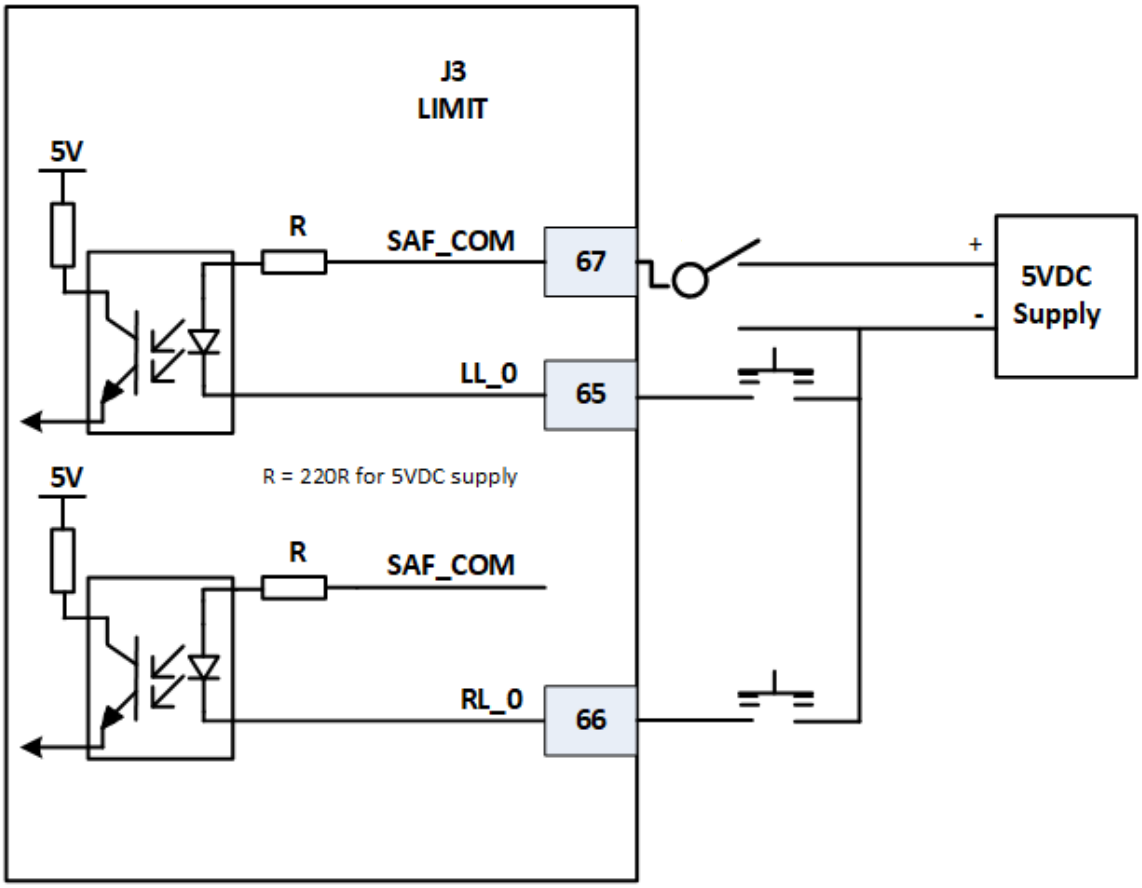

Figure 17. J3: Left and Right Limit Sink Connection

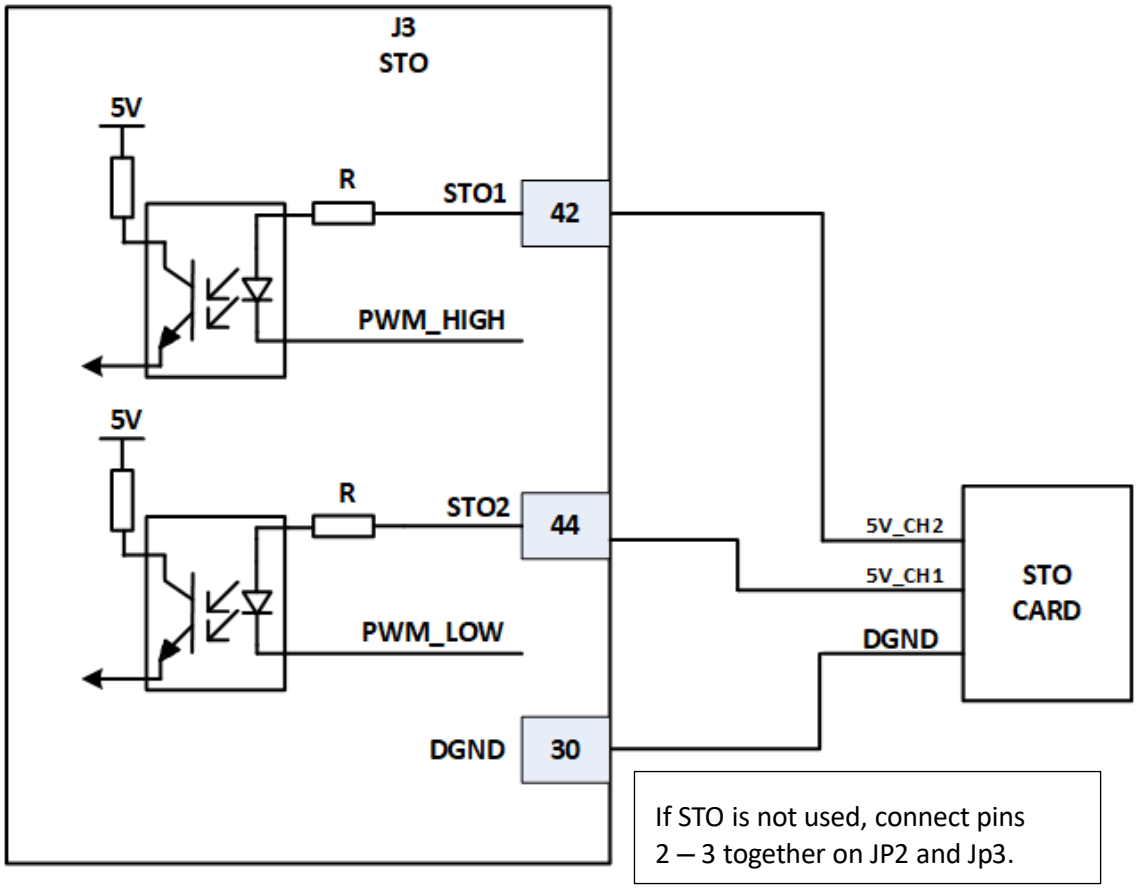

Figure 18. J3: STO Connection

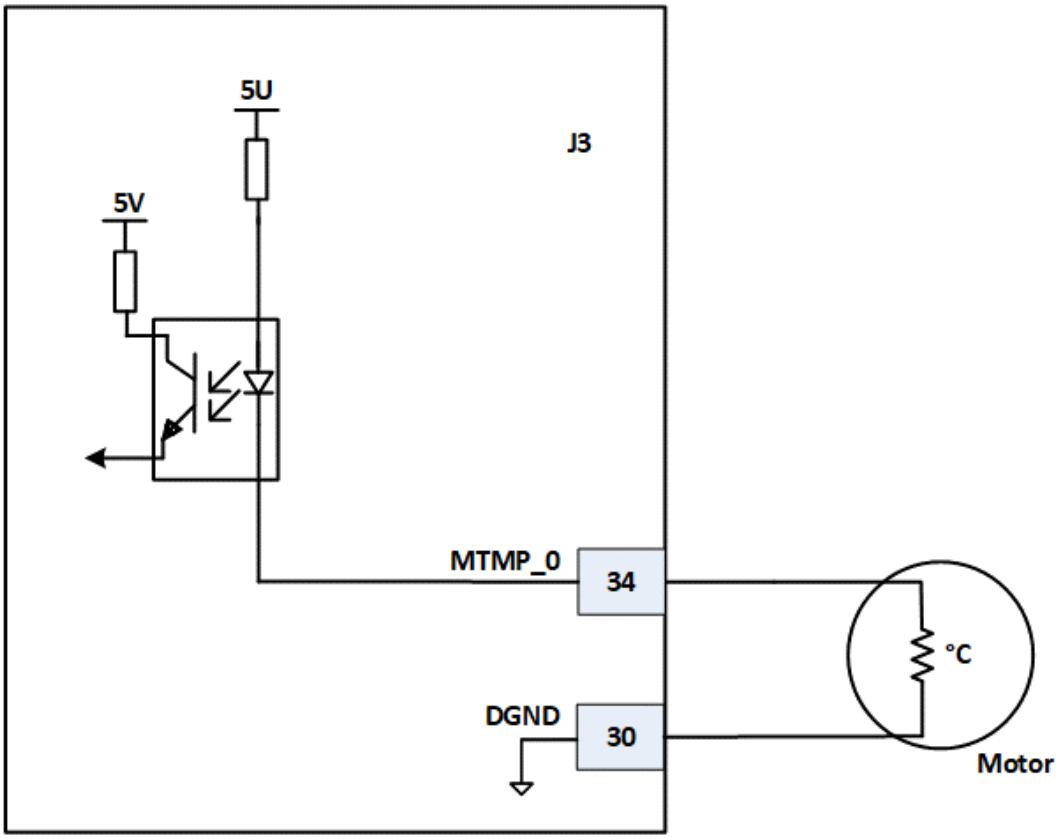

Figure 19. J3: MTMP Motor Temperature Sensor Connection

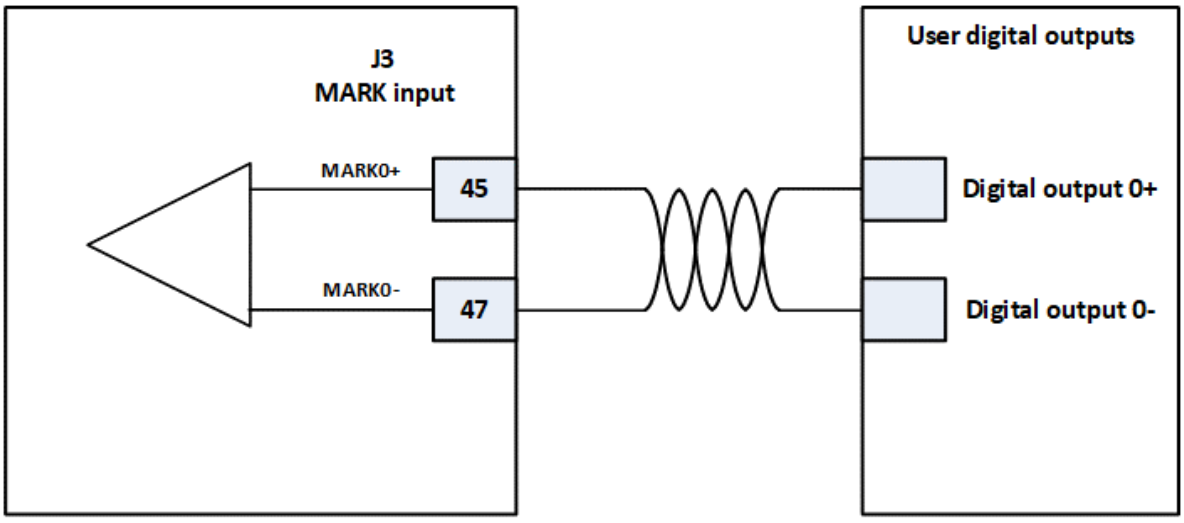

Figure 20. J3: MARK Input Connection

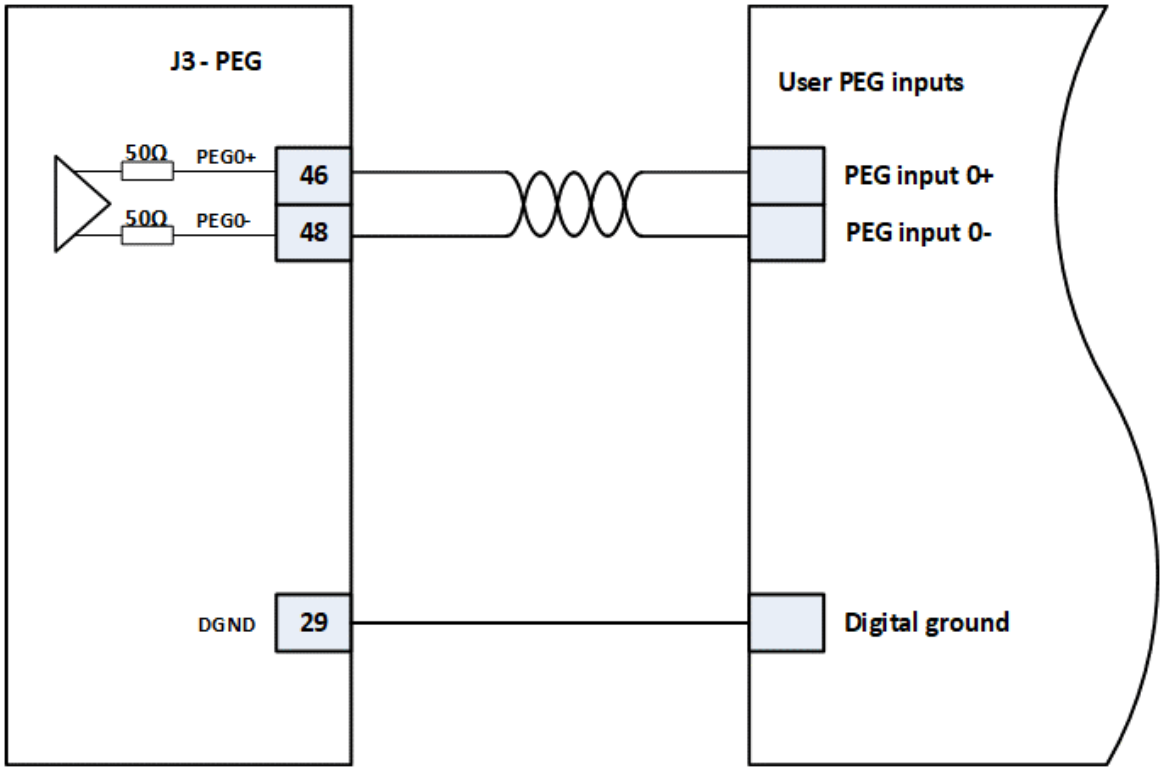

Figure 21. J3: PEG Outputs

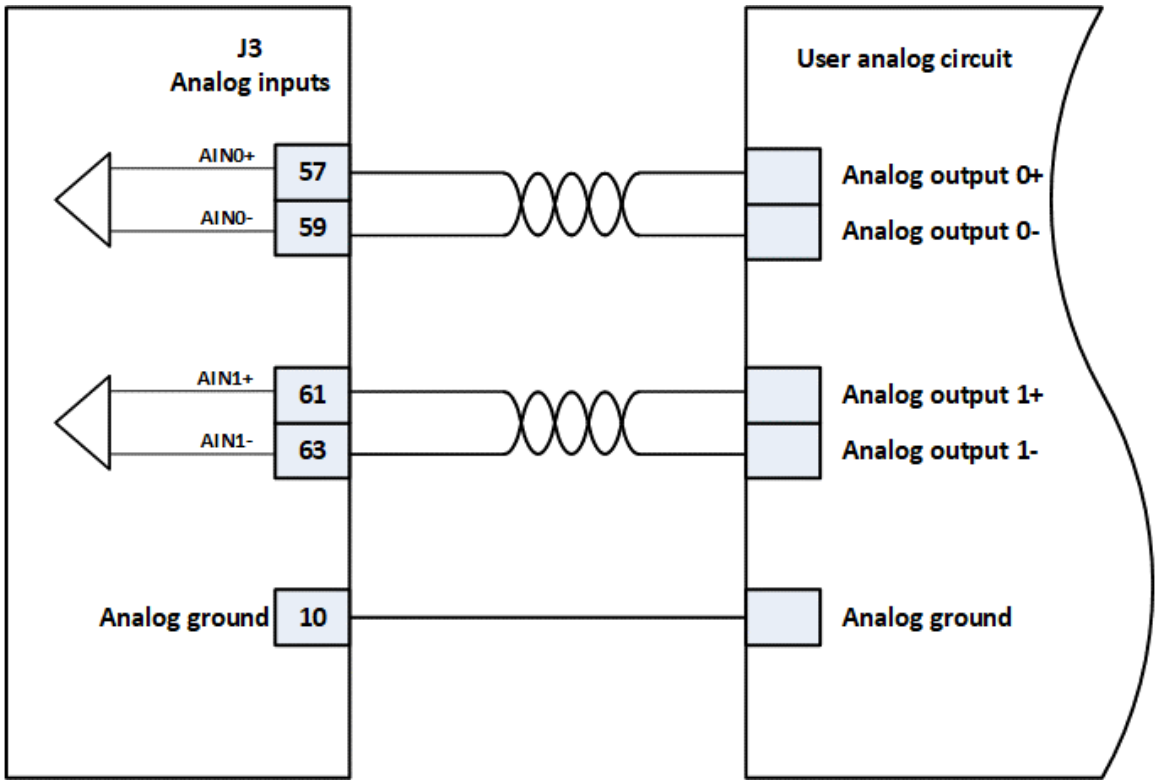

Figure 22. J3: GP Analog I/O Input Connections

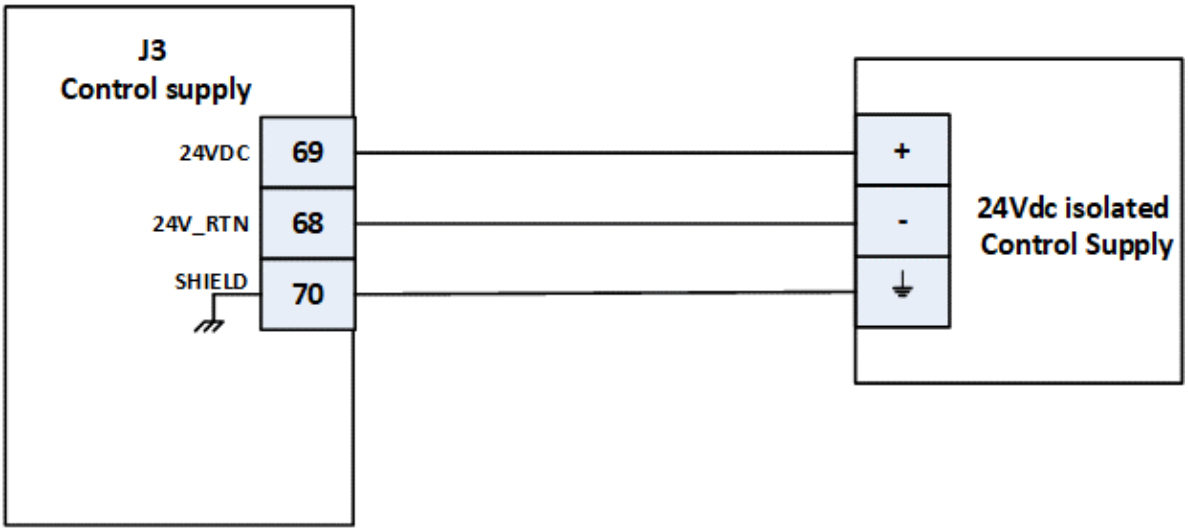

Figure 23. J3: Control Supply Connection

12 Installation and Power Up

	**Before you install the MDMst PCB Mount, ensure that the carrier board is NOT ELECTRICALLY ENERGISED! If necessary, perform a Lockout/Tagout on any electrical power that supplies the carrier board.**
	**Verify that the carrier board will not damage the MDMst PCB Mount either mechanically or electrically BEFORE installing the MDMst.**

Table 30. MDMst PCB Mount Installation and Power Up

Step	Action
1	Carefully insert the MDMst into the carrier board, being alert for: • Misalignment between the connectors on the MDMst and carrier board. • Misalignment between the four mounting holes in the carrier board and the mounting standoffs on the MDMst. • Obstructions on the carrier board that restrict installation and removal of the MDMst. • Obstructions that may restrict air flow around the MDMst.
2	Mechanically secure the MDMst to the carrier board.
3	Power up the Control Power Supply. If the fuse for the Control Power Supply blows (opens), troubleshoot the cause and fix it before continuing.
4	Power up the Motor Drive Power Supply. If the fuse for the Motor Drive Power Supply blows (opens), troubleshoot the cause and fix it before continuing.
5	Go to the next section, Setup the EtherCAT Network, on page 46.
End of Task	

13 Setup the EtherCAT Network

Upon completion of installing the MDMst, you can set up the EtherCAT network that the MDMst connects to. The two topics described below will help you accomplish this task:

- SPiiPlus Application Development Kit (ADK) Suite. This application must be installed on a computer that connects to the MDMst. You can download this application from the ACS website at the following link:
  https://www.acsmotioncontrol.com/resources/downloads/spiiplus-adk-suite/

- SPiiPlus Quick Start Guide provides information for setting up the EtherCAT network and associated hardware. It is available at the ACS website at the following link:
  https://www.acsmotioncontrol.com/resources/downloads/software-guides/

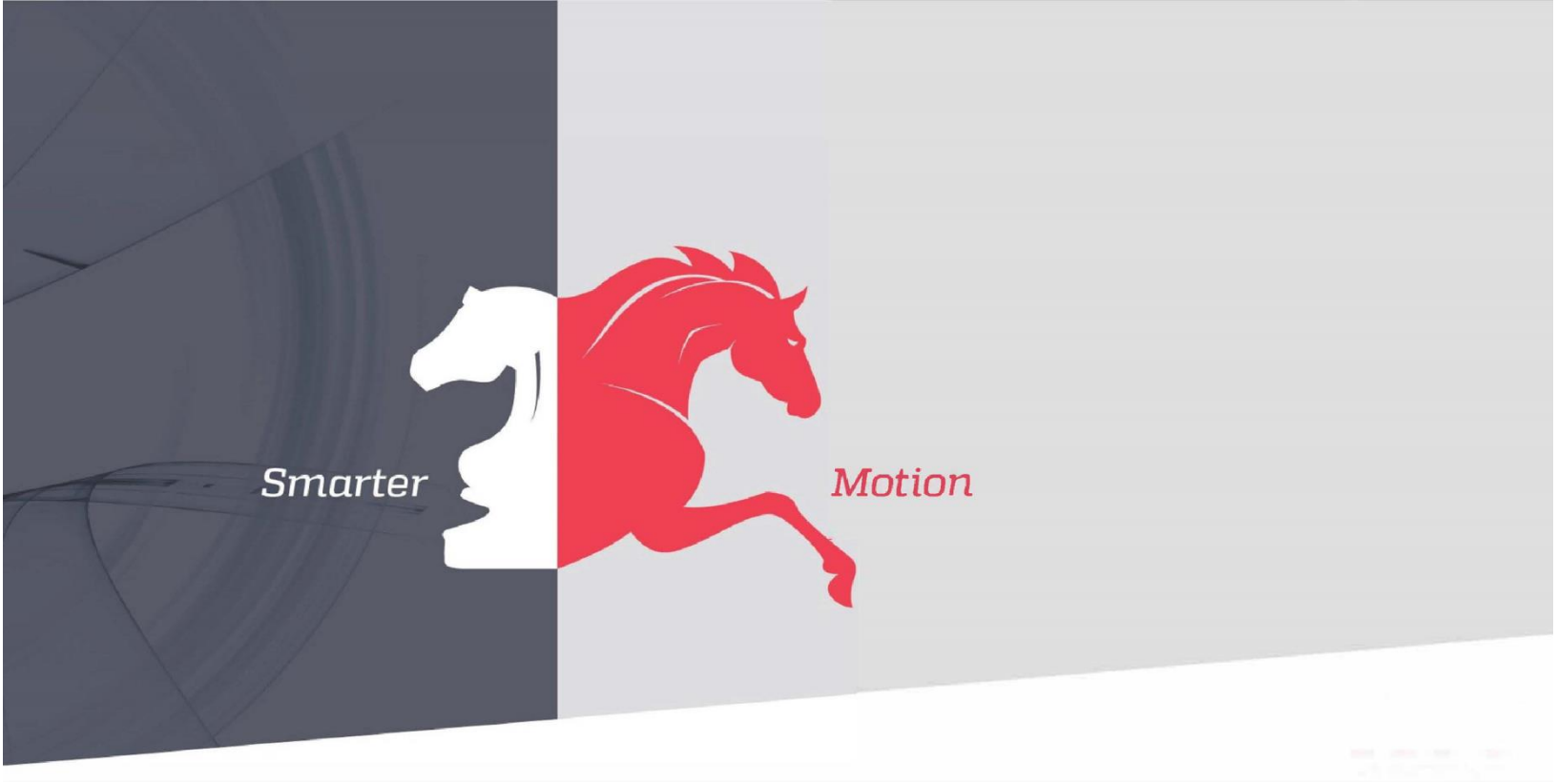

Yokne'am Illit 2066717

Israel

Tel: (+972) (4) 654 6440 Fax: (+972) (4) 654 6443