MDMst

Installation Guide
For Panel/Rail Mount

May 2024
Document Revision 3.14.01



ACS MOTION CONTROL

MDMst Panel Mount Installation Guide

Release Date: May 2024

COPYRIGHT

© ACS Motion Control Ltd., 2024. All rights reserved.

Changes are periodically made to the information in this document. The most recent version of this document can be found on the ACS Motion Control website.

No part of this document may be reproduced in any form without prior written permission from ACS Motion Control.

TRADEMARKS

EtherCAT® is registered trademark and patented technology, licensed by Beckhoff Automation GmbH, Germany.

Any other companies and product names mentioned herein may be the trademarks of their respective owners.

PATENTS

Israel Patent No. 235022
US Patent Application No. 14/532,023
Europe Patent application No.15187586.1
Japan Patent Application No.: 2015-193179
Chinese Patent Application No.: 201510639732.X
Taiwan (R.O.C.) Patent Application No. 104132118
Korean Patent Application No. 10-2015-0137612

www.acsmotioncontrol.com
support@acsmotioncontrol.com
sales@acsmotioncontrol.com

NOTICE

The information in this document is deemed to be correct at the time of publishing. ACS Motion Control reserves the right to change specifications without notice. ACS Motion Control is not responsible for incidental, consequential, or special damages of any kind in connection with using this document.

WARRANTY:

This product is warranted as described on the ACS Motion Control website at:

https://www.acsmotioncontrol.com/sales-and-warranty-terms/

Revision History

Table 1. Revision History		
Date	**Revision**	**Description**
May 2024	3.14.01	New document

Table of Contents

Revision History 3
Table of Contents 4
List of Figures 6
List of Tables 8
1 Safety Information 10
2 Compliance Markings 11
3 Conventions Used in this Guide 12
4 Related Documentation 13
5 Introduction 14
5.1 Document Scope 14
5.2 Product Overview 14
6 Safety and EMC 15
6.1 UL Installation 15
7 MDMst Installation Procedure 16
8 System Specifications 17
8.1 Supplies and Motors 17
8.2 Motor Feedback 18
8.3 STO, EtherCAT, and LED Indicators 22
8.4 Optional Accessories 24
8.5 Ordering Part Number 25
9 Control and Drive Power Supply Guidelines 26
10 Construct Cables for the MDMst Panel Mount 27
10.1 J1 STO Connector 29
10.2 EtherCAT In (J2) and EtherCAT Out (J3) Connectors 31
10.3 J4 Motor Connector 34

Continued next page

10.4 J5 Encoder....36
10.5 J5 Encoder Connection Schematics....38
10.6 J6 Control Supply....44
10.7 J7 I/O Connector....46
10.8 J8 Drive Supply Connector....52
11 Install the MDMst Panel Mount....54
11.1 MDMst Panel Mount Considerations....55
12 Connect and Power Up the MDMst Panel Mount....56
12.1 MDMst Panel Mount User Jumpers....56
12.2 Connect and Apply Electrical Power to the MDMst Panel Mount....57
13 Setup the EtherCAT Network....58

List of Figures

Figure 1. MDMst Panel Mount....14
Figure 2. MDMst Panel Mount: EtherCAT LEDs....23
Figure 3. MDMst Panel Mount: System and Drive Supply LEDs....23
Figure 4. MDMst Panel Mount Connectors....27
Figure 5. J1 STO Mating Connector and Pin Example....29
Figure 6. STO Connection....30
Figure 7. J2 and J3 EtherCAT Connectors (MDMst Panel Mount)....31
Figure 8. J2 EtherCAT IN From Slave Connection....32
Figure 9. J3 EtherCAT OUT to Slave Connection....32
Figure 10. J2 EtherCAT IN Connection to External EtherCAT Master Device....33
Figure 11. J4 Motor Mating Connector Example....34
Figure 12. J4 Motor Connections....35
Figure 13. J5 Encoder Mating Connector Example (looking at front)....36
Figure 14. J5 Encoder: Incremental Digital Encoder (AqB) Connection....38
Figure 15. J5 Encoder: Incremental Digital Encoder (CLK-DIR) Connection....39
Figure 16. J5 Encoder: SIN-COS Connection....39
Figure 17. J5 Encoder: Absolute Encoder Connection....40
Figure 18. J5 Encoder: Hall Sensor Input....40
Figure 19. J5 Encoder Left and Right Limit Source Connection on “ENCODER 0” Connector....41
Figure 20. J5 Encoder Left and Right Limit Sink on “ENCODER 0” Connector....42
Figure 21. J5 Encoder Motor Temperature Sensor Connection....43
Figure 22. J6 Control Supply Connector....44
Figure 23. J6: Control Supply Connection....45
Figure 24. J7 I/O Connector....46
Figure 25. J7 MARK Inputs Connection....47
Figure 26. J7 Left and Right Limits Source Connection....48
Figure 27. J7 I/O Left and Right Limit Sink Connection on LIMITS Connector....49
Figure 28. J7 PEG Outputs Connection....50
Figure 29. J7 General Purpose Analog Input Connections....51
Figure 30. J8 Drive Supply Onboard Connector Pin Numbering....52
Figure 31. J8 Drive Supply Connection....53
Figure 32. MDMst Panel Mount Dimensions (in mm)....54
....55
Figure 33. MDMst Panel Mount Side View (With Optional DIN Bracket)....55

Figure 34. Close-up Location of Jumpers and Pin Numbers 56

List of Tables

Table 1. Revision History 3
Table 2. Safety Symbols 10
Table 3. Compliance Markings 11
Table 4. Conventions Used in This Guide 12
Table 5. Related Documentatiomn 13
Table 6. Related Documentation 13
Table 7. MDMst Installation Procedure 16
Table 8. Control Supply Input 17
Table 9. Drive Supply Input 17
Table 10. Motor Output 17
Table 11. Incremental Digital Encoder 18
Table 12. SIN-COS Encoder (Optional) 19
Table 13. Absolute Encoder 19
Table 14. Digital Hall Sensor Inputs 20
Table 15. Limit Inputs 20
Table 16. MARK Inputs 20
Table 17. PEG Outputs 20
Table 18. GP Analog Inputs 21
Table 19. Motor Over Temperature 21
Table 20. STO 22
Table 21. EtherCAT Ports 22
Table 22. LED Indicators 22
Table 23. Power Losses and Operational Temperature 24
Table 24. Product and Software / Firmware Compatibility 24
Table 25. Package Contents 24
Table 26. Optional Accessory Kit – Panel Mount Only 24
Table 27. Power SupplyGeneral Selection Guidelines 26
Table 28. MDMst Panel Mount Connectors 28
Table 29. J1 STO Connector 29
Table 30. J2 EtherCAT In and J3 EtherCAT Out 31
Table 31. J4 Motor Connector 34
Table 32. J5 Encoder Connector 36
Table 32 J5 Encoder, Continued 37

Continued next page

Table 33. J5 Encoder Connection Schematics....38
Table 34. J6 Control Supply....44
Table 35. J7 I/O....46
Table 36. J7 I/O Connection Schematics....47
Table 37. J8 Drive Supply Connection....52
Table 38. MDMst Panel Mount Considerations....55
Table 39. Jumpers on the MDMst Panel Mount....56
Table 40. Connect and Apply Electrical Power to the MDMst Panel Mount....57

1 Safety Information

This guide uses the following safety symbols to alert the user to possible safety and equipment hazards.

Table 2. Safety Symbols	
Symbol	**Meaning**
	Warning symbol alerting the user to a possible personal injury hazard
	Warning symbol alerting the user to a possible electrical shock hazard
	Warning symbol alerting user of possible equipment damage.

2 Compliance Markings

The MDMst complies with the standards listed below and bears the associated compliance marks.

Table 3. Compliance Markings	
Mark	**Meaning / Standards**
	Conformité Européene (European Conformity) (pending)
	Functional Safety: IEC 61500-5-2
	EMC (Electromagnetic Compatibility): IEC 61800-3
	UK Conformity Assessed (Pending)
	EMC: IEC 61800-3
	The UL Recognized mark on an ACS Motion Control product indicates that it has fulfilled the requirements required as a component of drive applications and is appropriately listed.
	Technischer Überwachungsverein (English: Technical Inspection Association
	STO & SS1 Functional Safety: IEC 61508, IEC 61800-5-2

3 Conventions Used in this Guide

Table 4. Conventions Used in This Guide	
Text	**Description**
NOTE	Important information related to a topic.
Bold	Names of GUI objects or commands
Italics	Names of other documents
Blue	Hyperlink
>>	Navigation through a menu.

4 Related Documentation

The documents listed below provide additional information related to the MDMst.

Authorized users can download the latest versions of these documents from https://www.acsmotioncontrol.com/resources/.

Table 6. Related Documentation

Document	Description
SPiiPlus ACSPL+ Programmer's Guide	Provides practical instruction on how to use ACSPL+ to program your motion controller.
SPiiPlus Command & Variable Reference Guide	Describes all of the variables and commands available in the ACSPL+ programming language.
SPiiPlus MMI Application Studio User Guide	Explains how to use the SPiiPlus MMI Application Studio and associated monitoring tools.
SPiiPlus Quick Start Guide	Provides guidance on how to configure and adjust the SPiiPlus systems to work with supported types of motors and feedback devices.
Using Absolute Encoders with ACS Products Application Note	Addresses the physical connections, configuration and operation of absolute encoders with ACS networking products.
Safe Torque Off Function Application Note	Describes how to implement the SS1-t/STO function for drives installed in ACS Motion Control systems.
Autofocus Control Application Note	Provides details for implementing Autofocus

5 Introduction

5.1 Document Scope

This document provides detailed information for installing the MDMst Panel Mount. It is intended for engineers and technicians experienced in installing and commissioning motion control systems.

5.2 Product Overview

The MDMst is an economical single axis EtherCAT drive with a very small footprint. This PWM drive works as a slave to any ACS EtherCAT master.

The MDMst is fed by two power supplies provided by the customer;

- 24 Vdc for control power
- 12-48 Vdc for motor drive power.

Figure 1 below shows the MDMst Panel Mount. This drive can also be mounted on a DIN rail using the optional DIN bracket.



Figure 1. MDMst Panel Mount

6 Safety and EMC

Read this section carefully before beginning the installation process. Make sure that the following guidelines and procedures are addressed and observed prior to powering up.

An STO module (Safe Torque Off) is an optional feature of the unit (not provided with the product). Additional information can be found in the dedicated safety manual (future release).

Installation and maintenance must be performed only by qualified personnel who have been trained and certified to install and maintain high power electrical and electro-mechanical equipment, servo systems, power conversion equipment and distributed networks.

Ensure that all the attached power and signal cables are in good operating condition. Maintenance should be performed only after the relevant network devices have been powered down, and all associated and surrounding moving parts have settled in their safe mode of operation.

To avoid electric arcing and hazards to personnel and electrical contacts, avoid connecting and disconnecting the drive while the power source is on. When connecting the drive to an approved isolated control and drive supply, connect it through a line that is separated from hazardous live voltages using reinforced or double insulation, in accordance with approved safety standards.

The drive is not intended for use in safety-critical applications (such as life support devices) where a failure of the drive can reasonably be expected to cause severe personal injury or death.

Connectors J8, J10, and J4 on the MDMst Panel Mount contain hazardous voltages up to 48Vdc.

Observe the following guidelines to ensure safe and proper wiring:

- Whenever possible, use shielded cables with braided shield of at least 80%-95% coverage.
- Proper wiring, grounding and shielding are essential for ensuring safe, dependable, and optimal servo performance.
- After completing the wiring, carefully inspect all wires to ensure tightness, good solder joints, and general safety.

6.1 UL Installation

- A 15A littelfuse p/n 0NLN015.T (or equivalent) should be installed between the output of the external drive supply and J8 on the MDMst.
- Motor over temperature protection shall be provided by the end user.
- Suitable For Use On A Circuit Capable Of Delivering Not More Than 5KA rms SymmetricalAmperes, 60Vdc Volts Maximum.
- The rated temperature range of operation of the MDMst is 0 to + 50° C. Above 40º C ambient, forced-air cooling of 8.2 CFM should be used to cool the drive.

7 MDMst Installation Procedure

Read this Installation Guide thoroughly before installation and setup of the MDMst, then follow the steps in the procedure below to install and setup the MDMst Panel Mount.

Table 7. MDMst Installation Procedure

Step	Action
1	Become familiar with the System Specifications. Go to: System Specifications on page 17
2	Select the Control and Drive power supplies: Go to: Control and Drive Power Supply Guidelines, on page 26
3	Go to Construct Cables for the MDMst Panel Mount on page 27.
4	Go to Install the MDMst Panel Mount on page 54.
5	Go to Connect and Power Up the MDMst Panel Mount on page 56.
6	Go to Setup the EtherCAT Network on page 58.
Installation Completed	

8 System Specifications

8.1 Supplies and Motors

Table 8. Control Supply Input	
Voltage range:	24 VDC ±5%
Maximum Input Current:	<1 A @ 22.8 VDC
Protection:	Reverse polarity, short circuit

Table 9. Drive Supply Input		
Voltage Range:	12-48 VDC	• **WARNING** Always connect the Drive supply to the MDMst with soft start. See the warning in Table 37. on page 52. • Use Littlefuse 15 A P/N 0NLN015.T or equivalent between the power supply and the MDMSt. • There is no regeneration circuit in the MDMst. It is user's responsibility to assure the drive supply voltage will not exceed 55 V under any condition.
Maximum Input Current (continuous/peak, Arms)	4.3/8.6 A	
Input power per axis (continuous/peak, W)	205/412W	
Inrush current	50 A for 40µS @ 48 VDC	
Protections	Reverse polarity **NOTE:** The supply fuse will open in case of reverse polarity.	

Table 10. Motor Output	
Designation	R, S, T
Quantity	1
Motor Output Type	PWM three phase power bridge
Motor configuration	• 3-phase brushless • DC brush • 2 phase DC brushless • 2 and 3 phase step motors • Voice coil
Output Current (A)	5/10 continuous/peak sine amplitude **NOTE:** Peak current is for 1 second
Maximum output voltage (Vrms)	33 V phase to phase
Continued next page	

Motor Output, Continued	
PWM frequency (Khz)	20 Khz
Output power (W)	196/386 (continuous/peak)
Load inductance	>12 uH Phase @ 24 VDC
Electrical motor's time constant	100 uS
Protections	Short and over current: 15 A Over temperature: 100ºC (on the product's PCB) Under voltage: 9 V±3% Over voltage: 56 V±3%
Efficiency	>98%
Regeneration	No

8.2 Motor Feedback

The MDMst supports three types of encoders:

- Incremental digital encoders (AqB), standard on all MDMst models
- Analog SinCos (optional)
- Absolute encoders (optional)

Table 11. Incremental Digital Encoder	
Designation	A: #_CHA± B: #_CHB± I: #_CHI±
Quantity	1
NOTE	Multi-channel feedback is not available with the MDMst.
Interface	Differential, RS422
Maximum input frequency	50M counts per second. **NOTE:** 12.5 MHz A & B input frequency appropriate to 50 million quadrature counts per second.
Input termination	120 Ω **NOTE:** On each signal pair
Protection	Encoder not connected, encoder error
Encoder supply	5.1-5.15 V, 0.5 A total for all digital encoders.

Table 12. SIN-COS Encoder (Optional)	
NOTE	**Connecting to the SIN-COS connections on J5 makes the analog inputs on J7 unavailable.** The SIN-COS inputs on J5 share the same internal circuitry in the MDMst as the analog inputs on connector J7.
Designation	#_SIN± #_COS± #_SC_I±
Format	SIN, COS and Index
Quantity	1
Type	Differential input Input impedance 120 Ω ±10%. Encoder voltage range 1 Vp-p±10% Input Voltage range: 1.20 Vp-p
Maximum frequency	500 kHz
Encoder output supply	5.1-5.15 V, 0.5 A total for all analog encoders.
Squared SIN-COS	The squared signals of the SIN-COS are available.
ADC resolution	12-bit
Diagnostics	Encoder error and encoder not connected.
Compensation	Phase, Gain and offset

Table 13. Absolute Encoder	
Designation	#_CHA #_CHB
Quantity	1
Type	• EnDat2.1, 2.2 Heidenhain, based on ROQ 437 SERIES • Smart-Abs: Tamagawa, based on: SA35-17/33bit-LSP-5 V • BiSS-B/C • Panasonic: based on AC Servo Motor MINAS A4/A6 Series
Maximum input frequency	• EnDat- 2 MHz • Smart-Abs-2.5 MHz • Biss-C- 10MHz • Panasonic- 2.5 MHz
Interface	Differential RS485
Encoder supply	5.1-5.15 V, 0.5 A total for all digital encoders.

Table 14. Digital Hall Sensor Inputs	
Designation	#_HA #_HB #_HC
Quantity	One set
Interface	5 V, Source input type, (open cathode). Reference DGND
Input current	< 7 mA current.

Table 15. Limit Inputs	
Designation	#_RL #_LL
Quantity	2 per axis
Interface	Single-ended, 5±20%, opto-isolated, sink/source, configurable via JP1.
Behavioral	No current= limit off.
Input current	<14 mA.

Table 16. MARK Inputs	
Designation	MARK± **NOTE:** Can be used as a general-purpose digital input.
Quantity	1
Interface	Differential RS422
Maximum encoder frequency	<12.5MHz
Maximum capture Frequency	50 Hz for 1 Khz MPU cycle 250 Hz 5 Khz MPU cycle

Table 17. PEG Outputs	
Designation	PEG0± **NOTE:** can be used as a fast GP output.
Quantity	1
Interface	Differential, RS422 compatible.
Maximum frequency	10 Mhz
Pulse width	26.7 ns to 1.745 ms

Table 18. GP Analog Inputs	
Designation	AIN_#±
Quantity	2
Interface	Differential input, ±10 V±5%
Maximum input frequency	500 KHz
Resolution	12-bit
Offset	<100 mV
SNR	>54 dB

Table 19. Motor Over Temperature	
Designation	Motor over temperature: #_OVER_T
Quantity	1
Type	Single-ended, opto-isolated, reference to DGND
Threshold (ON / OFF)	**ON:** Impedance between _Motor_OVER pin to ground is > 10 KΩ **OFF:** Impedance between _Motor_OVER pin to ground is < 1 KΩ. If this input is NOT USED, connect it to DGND.
Default state	Over temperature off = Low impedance < 1K Ω

8.3 STO, EtherCAT, and LED Indicators

Table 20. STO	
NOTE	For information on implementing and testing STO, please refer to Application Note Safe Torque Off Function at the ACS Motion Control website: https://www.acsmotioncontrol.com/resources/download/an-sto-safe-torque-off-function/
Designation	STO1_5 V± STO2_5 V± **NOTE:** External safety controller / PLC or STO card required.
Quantity	2 inputs. When 5 V turns OFF, PWM switches OFF immediately. One shuts off the upper part of the motor bridge and one the lower part.
Interface	5 Vdc non-isolated, two terminals for each input, reference DGND.
Input current (per input pin)	<20 mA
Behavior	No current = drive off.

Table 21. EtherCAT Ports	
Designation	Transmit: ETH#_TX±: Receive: ETH#_RX±
Quantity	2
Interface	EtherCAT protocol
Speed	100 Mbps
EtherCAT cycle rate	Up to 10 kHz

Table 22. LED Indicators	
Control Supply – Yellow J3 connector, yellow LED	Off – Logic supply doesn't function. **See Figure 2 on page 23.** On – power supply is ok.
Link Act – Green Located on each RJ45 connector	Off – Cable not connected. **See Figure 2 on page 23.** Blinking – Link and activity Solid On –Link without activity
Run – Yellow RJ45 EtherCAT In	Off – INIT state **See Figure 2 on page 23.** Blinking (slow) – PRE-OPERATIONAL state Single Flash – SAFE-OPERATIONAL state On – OPERATIONAL state Flickering (fast) – BOOTSTRAP state
System – Bicolor Red/Green	Red – System Fault. **See Figure 3 on page 23** Green – System Ok. Blinking – Software Command.
Drive Supply – Green	Off – Logic supply isn't connected. **See Figure 3 on page 23** On – Power supply is ok.

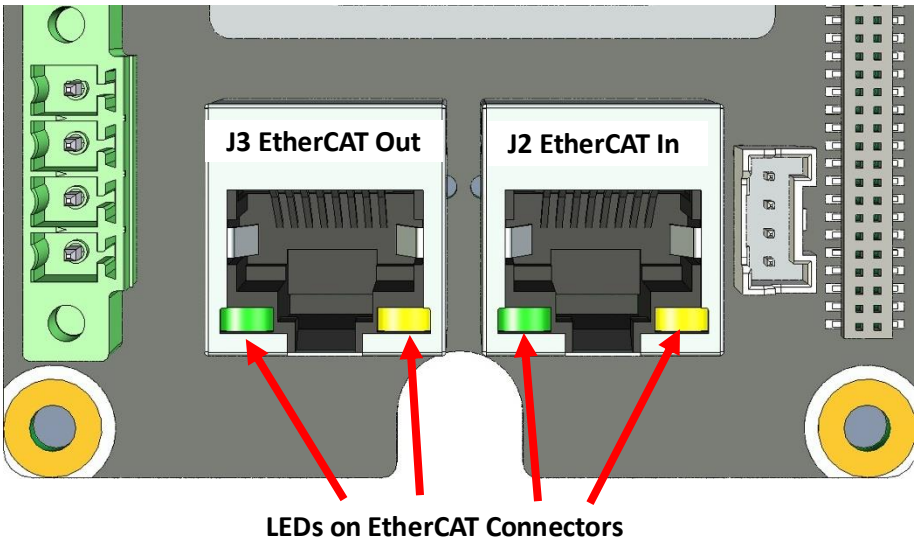

Figure 2. MDMst Panel Mount: EtherCAT LEDs

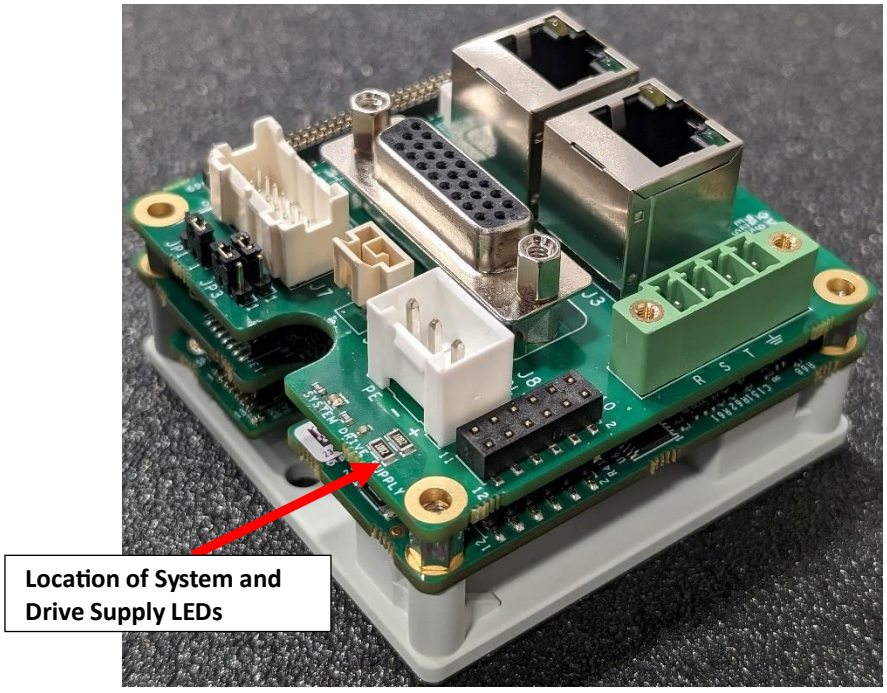

Figure 3. MDMst Panel Mount: System and Drive Supply LEDs

Table 23. Power Losses and Operational Temperature	
Bridge Power Loss	4.5 W (98% efficiency)
Rated Operating Temperature Range	0º C to +50º C
NOTE	Above 40º C forced-air cooling at 8.2 CFM is necessary.

Table 24. Product and Software / Firmware Compatibility	
Product Name	MDMst
Product Revision	A
Software	SPiiPlus ADK Suite
First Release	Version 3.14.01
Last Release Version	Current

Table 25. Package Contents
• Control Logic Supply mating connector (J6) • Drive Supply mating connector (J8) **NOTE:** These connectors must be wired by the customer.

8.4 Optional Accessories

Table 26. Optional Accessory Kit – Panel Mount Only	
NOTE	The MDMst-ACC accessory kit must be ordered separately, it is not included with the MDMst Panel Mount.
Contents of MDMst–ACC accessory Kit: • STO Connector and Pins (J1) • Motor mating connector (J4) • Encoder mating connector (J5) • I/O mating connector (J7) • DIN Rail Bracket	
NOTE	Information for constructing the cables for the MDMst Panel Mount are available at: Construct Cables for the MDMst Panel Mount on page 27.

8.5 Ordering Part Number

8.5.1 Example Part Number Order

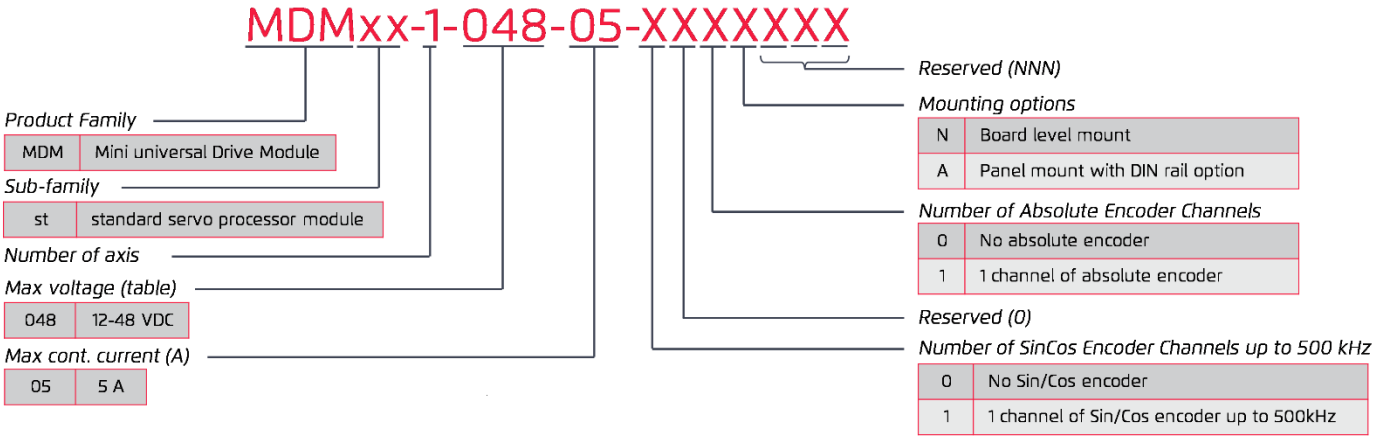

Example for MDMst:
MDMst-1-048-05-100ANNN
Standard Performance single axis 12-48V, 5A/10A, 1 Sin/Cos 500kHz Encoder channel, no absolute encoder, and panel mount

9 Control and Drive Power Supply Guidelines

The MDMst Panel Mount requires two external power supplies:

- Control Power Supply (24 Vdc)
- Motor Power Supply (12 – 48 Vdc)

The table below provides guidelines for selecting these external power supplies.

Table 27. Power SupplyGeneral Selection Guidelines	
The power supply must be isolated.	
The power supply must be CE and UL approved.	
The power supply must be short circuit protected.	
The power supply must have very low noise and ripple.	
Control Supply Only	
Example Power Supply: An example of a suitable 24V/50W control power supply is the XP Power P/N VCS50US24 supply.	
Drive Supply Only	
⚠WARNING	Always connect the Drive supply to the MDMst with soft start. Connect the Drive supply to the MDMst BEFORE applying AC power to 48v power supply.
Ripple: Measure the ripple next to the drive supply connector and verify that the ripple is less than 1V during motion. If the ripple is higher, an external capacitor of 2000 uF, installed as close as possible to the drive (no further than 20 cm from the drive), can help reduce power bus current ripple. Use a capacitor whose working voltage is compatible with the drive supply output maximum.	
Regeneration: There is no regeneration circuit in the MDMst. It is the user's responsibility to make sure that the DC drive supply voltage will not exceed 52 Vdc.	
Peak Current: The drive power supply must be able to provide the peak current required by the motor (inductive load).	
Fuse: Use 15 A Littlefuse P/N 0NLN015.T or equivalent between the power supply and the MDMSt.	
Example Power Supply: The HPU1K5PS48 by XP Power is an example of a 48 Vdc/1500 W drive power supply.	

10 Construct Cables for the MDMst Panel Mount

This section describes how to construct cables to connect the MDMst Panel Mount to external devices. Figure 4 below shows the dimensions, and locations of the connectors and User Jumpers on the MDMst Panel Mount.

NOTE	See details of the User Jumpers on page 56.

The table on the next page shows all the connectors on the MDMst Panel Mount. Detailed connection information follows.

NOTE	The standard MDMst Panel Mount includes mating connectors for: • J6 Control Logic Supply mating connector • J8 Drive Supply mating connector The optional MDMst–ACC accessory Kit includes parts to assemble mating connectors to J1, J4, J5, and J7) on the MDMst Panel Mount.

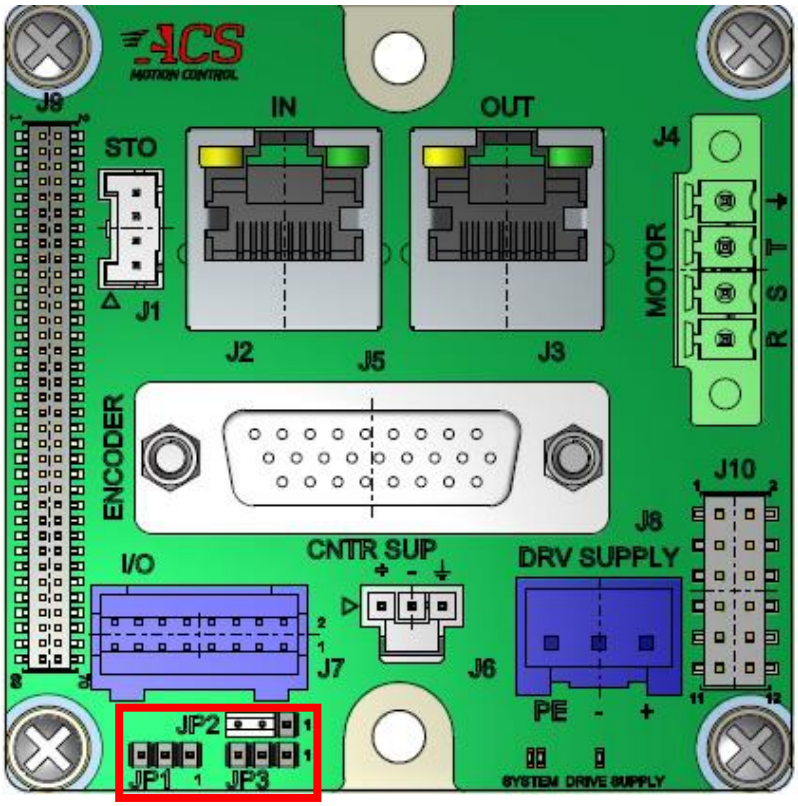

User Jumpers

Figure 4. MDMst Panel Mount Connectors

Table 28. MDMst Panel Mount Connectors			
Connector	**Function**	**Onboard Connector**	**Mating Connector**
J1	STO	JST p/n B04B-PASK-1	JST p/n PAP-04V-S Pins: SPHD-001T-P0.5
J2	EtherCAT IN	RJ45 socket 8 positions 8 contacts, shielded, CAT 5e	RJ45 plug (8 contacts)
J3	EtherCAT OUT	RJ45 socket 8 positions 8 contacts, shielded, CAT-5e	RJ45 plug (8 contacts)
J4	MOTOR	MCV 1,5/ 4-GF-3,81 | phoenix contact (1830619)	Phoenix MC 1,5/ 4-STF-3,81 1827729
J5	ENCODER	D-type 26 pin high density female	D-type 26 pin high density male
J6	CONTROL SUPPLY	Molex p/n 105309-2203	Molex p/n 1053072203 Pin: Molex 1053001200
J7	I/O	16 pin 2mm pitch header. JST p/n: B16B-PADSS-1F	16 pin 2 mm pitch plug. JST p/n PADP-16V-1-S Pin: SPH-001T-P0.5L or SPND-001T-C0.5
J8	DRIVE SUPPLY	3 pin 3.96mm, JST p/n B3P-VH-FB-B	3 pin JST p/n VHR-3N Pin: SVH-41T-P1.1

NOTE	The parts shown in the construction of the cables can be replaced with parts that have the same electrical and physical specifications.

10.1 J1 STO Connector

This section describes how to connect Safe Torque Off (STO) inputs to the MDMst Panel Mount. More information about STO is available in the Application Note *Safe Torque Off Function.* You can download this Application Note from the ACS web site at the following link:

https://www.acsmotioncontrol.com/resources/download/an-sto-safe-torque-off-function/

A schematic of the STO circuit in the MDMst is on the next page.

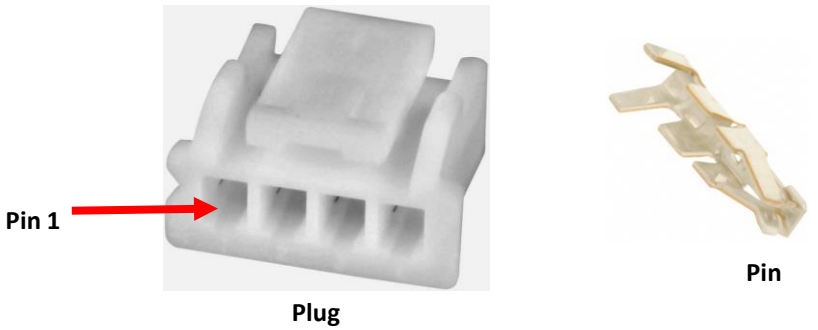

Figure 5. J1 STO Mating Connector and Pin Example

Figure 5 above shows an example of a plug and pins to use to fabricate a connector to mate with J1 STO connector on the MDMst Panel Mount. Table 29. below gives details for the mating connector.

Table 29. J1 STO Connector

Mating Connector Parts		
Vendor	**MFR P/N**	**Description**
JST-Japan	PAP-04V-S	4-pin, 2 mm pitch plug
JST-Japan	SPHD-001T-P0.5	Pin

J1 Pinout (reference this table when wiring the mating connector)		
Pin	**Name**	**Description**
1	STO1_5V	5 V STO input 1
2	STO_RTN	STO supply return (DGND)
3	STO2_5V	5 V STO input 2
4	EGND	Shield

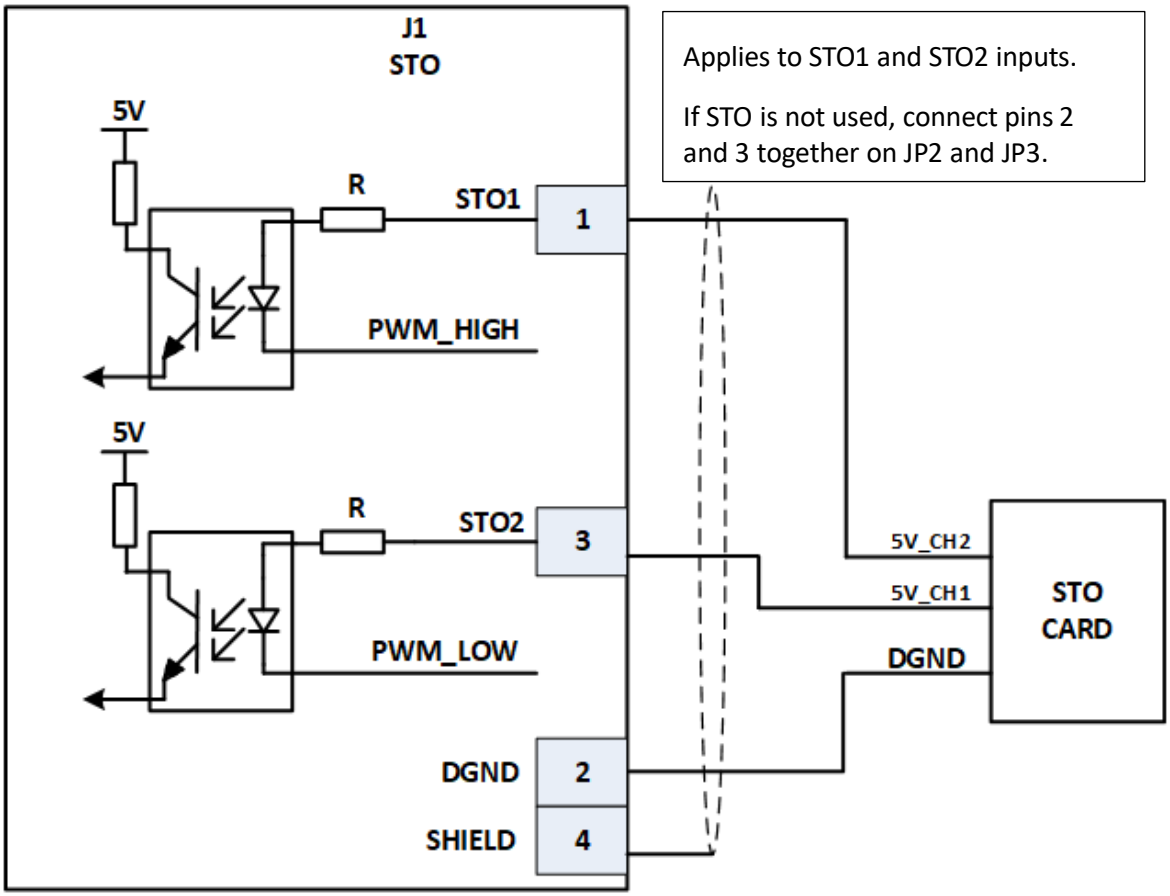

Figure 6. STO Connection

10.2 EtherCAT In (J2) and EtherCAT Out (J3) Connectors

EtherCAT In (J2) and EtherCAT Out (J3) have the same pinouts, as shown in the table below. Figure 7 below shows the locations of J2 and J3, and their pinout.

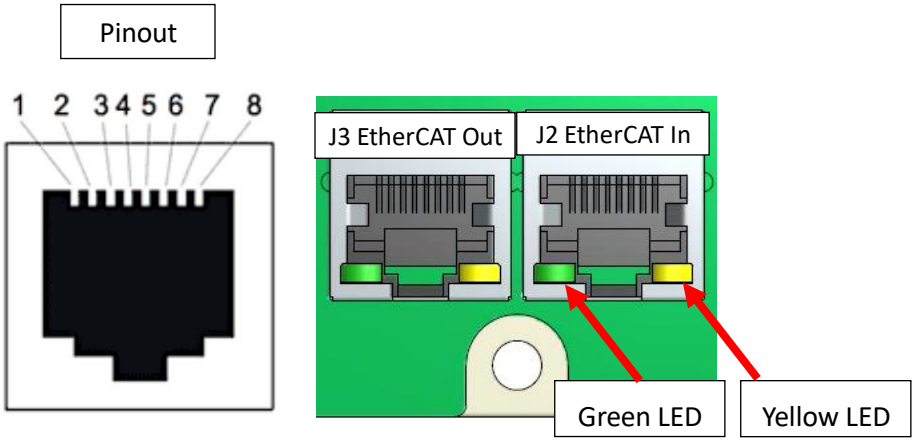

Figure 7. J2 and J3 EtherCAT Connectors (MDMst Panel Mount)

Table 30. J2 EtherCAT In and J3 EtherCAT Out		
Mating Connectors		
Use standard CAT5e cables and above terminated with RJ45 plugs to mate with J2 and J3 according to the pinouts below.		
J2 and J3 Pinout (reference this table when wiring the mating connectors)		
Pin	**Name**	**Description**
1	TD+	Positive transmit signal
2	TD-	Negative transmit signal
3	RD+	Positive receive signal
4	NC	Not connected
5	NC	Not connected
6	RD-	Negative receive signal
7	NC	Not connected
8	NC	Not connected

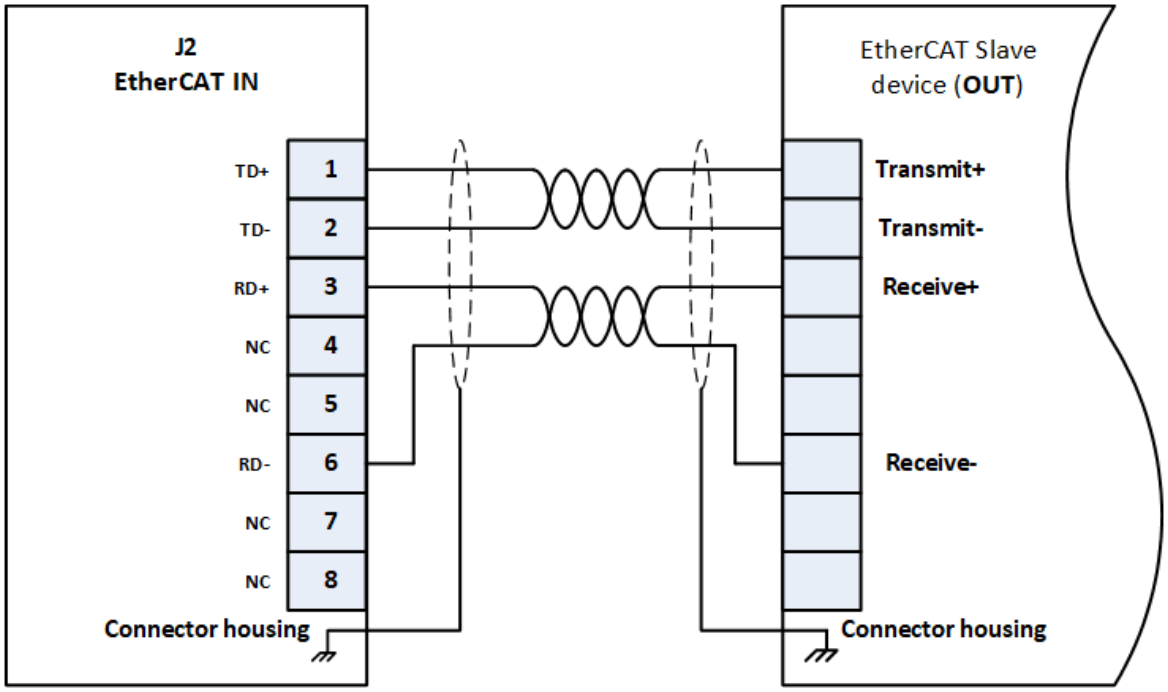

Figure 8. J2 EtherCAT IN From Slave Connection

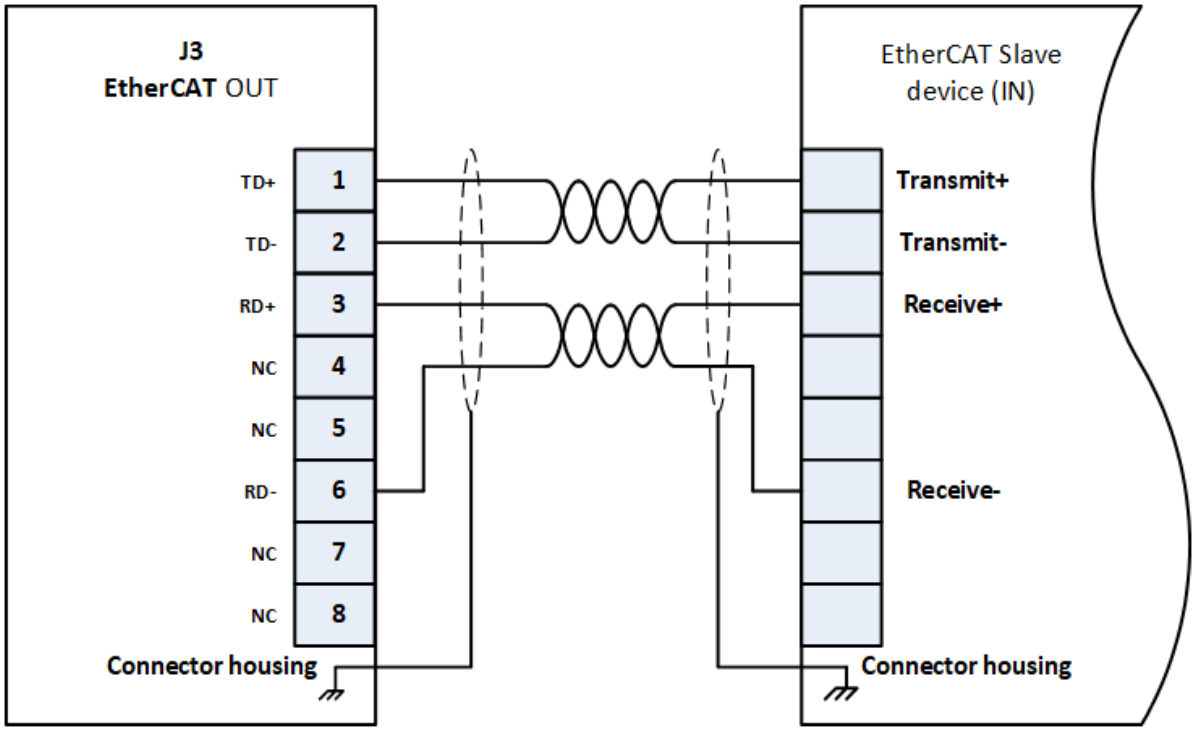

Figure 9. J3 EtherCAT OUT to Slave Connection

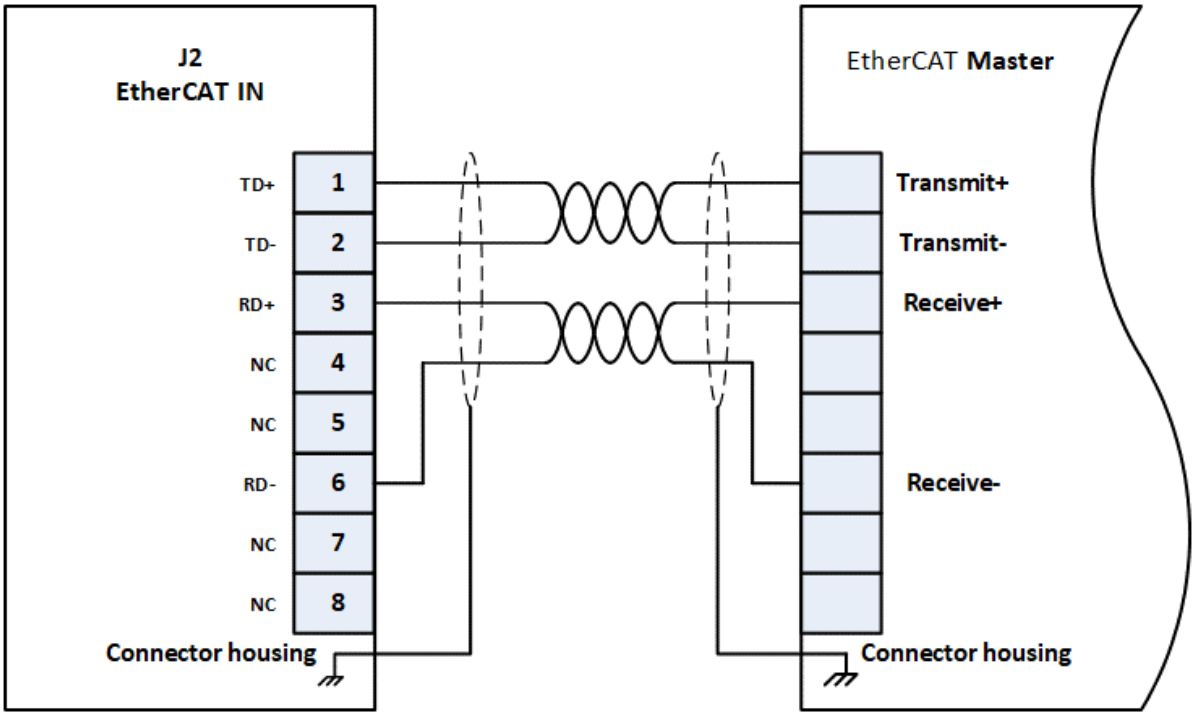

Figure 10. J2 EtherCAT IN Connection to External EtherCAT Master Device

10.3 J4 Motor Connector

General considerations for wiring J4 to a motor:

- Use a shielded cable with a maximum length of three meters, and minimum wire gauge of 18 AWG.
- Route the motor's cable (and the drive supply cable) as far as possible from all other noise sensitive cables (such as encoders and I/O).
- Connect the motors according to the information below, and the schematics on the following page.

Figure 11 below shows an example of a connector that can be used to mate with J4. See Table 31. below for a recommended vendor and part number of a mating connector for J4.

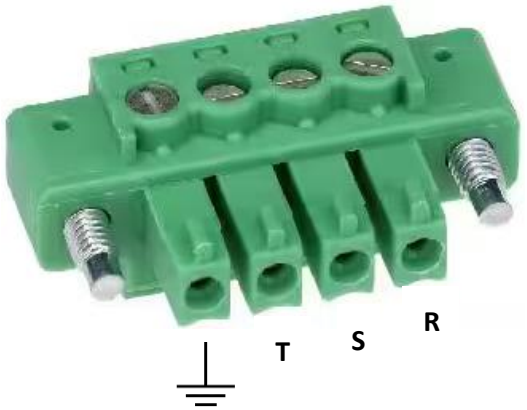

Figure 11. J4 Motor Mating Connector Example

Table 31. J4 Motor Connector

Mating Connector		
Vendor	**MFR P/N**	**Description**
Phoenix	MC 1.5/4-STF-3.81	4-position pluggable PCB Terminal Block

J4 Pinout (reference this table when wiring the mating connector)		
Pin	**Name**	**Description**
1	R	Motor phase R
2	S	Motor phase S
3	T	Motor phase T
4	SHIELD	Electrical ground / Protective earth

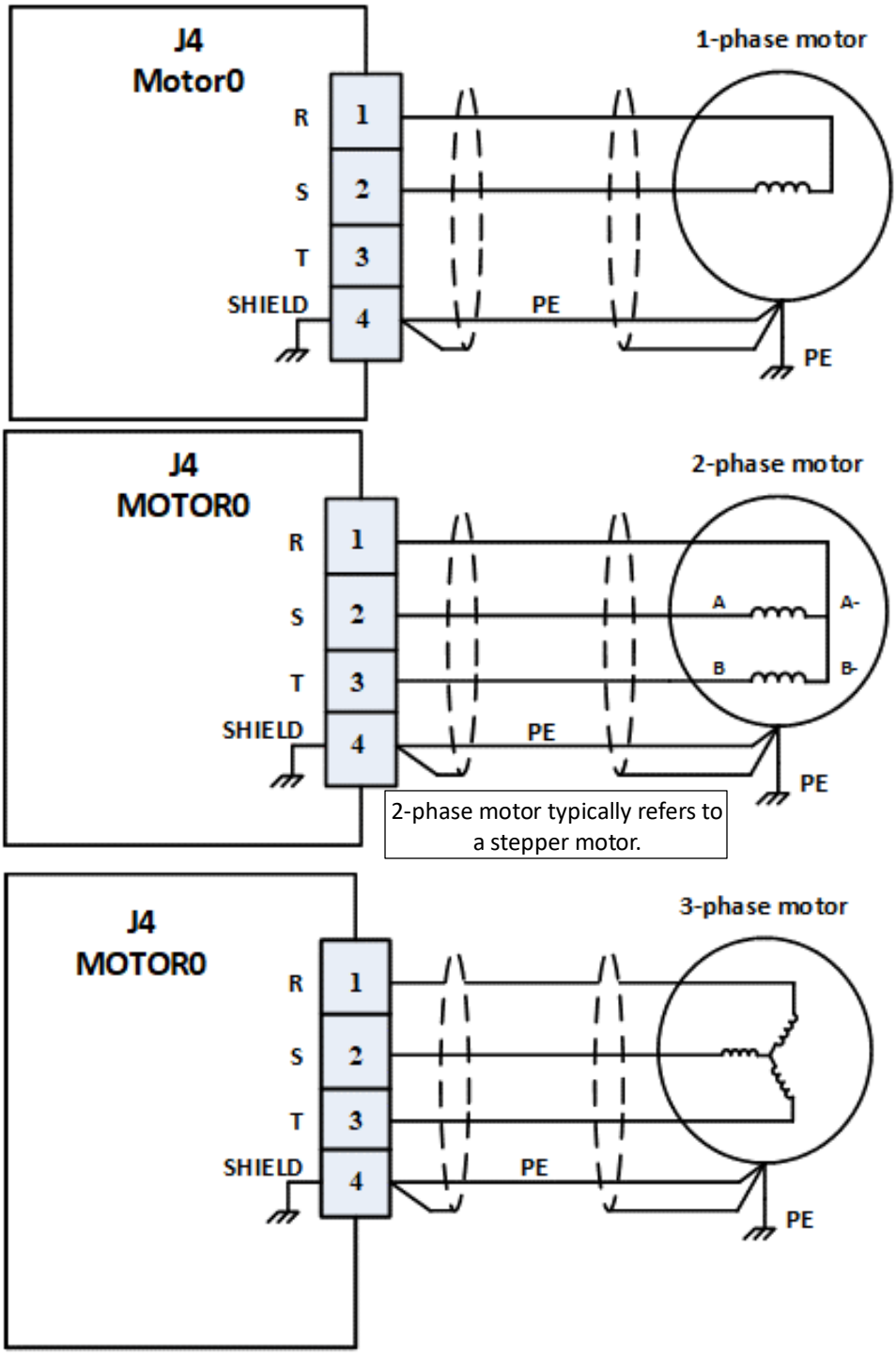

Figure 12. J4 Motor Connections

10.4 J5 Encoder

This section describes how to construct a cable to mate with connector J5 (Encoder) on the MDMst Panel Mount.

When building a cable to mate with J5, refer to Figure 13 below and Table 32. below to correctly wire the connector.

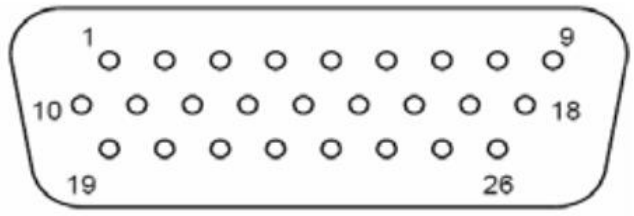

Figure 13. J5 Encoder Mating Connector Example (looking at front)

Table 32. J5 Encoder Connector

Mating Connector Parts		
Vendor	**MFR P/N**	**Description**
AMPHENOL	L777HRA26P	D-SUB High-Density Plug 26P (male pins)

NOTE	The manufacturer and part numbers are suggested. Any connector with the same electrical and physical specifications may be used.

J5 Pinout (reference this table when wiring the mating connector)		
Pin	**Name**	**Description**
1	_CHA-/ SQR_SIN-	digital encoder, channel A inverted input, for differential encoder only. Absolute encoder Data – Squared SIN inverted output.
2	_CHB-/ SQR_COS-	digital encoder, channel B inverted input for differential encoder only. Absolute encoder CLK – Squared COS inverted output.
3	_CHI-	digital encoder, channel I (index) inverted input for differential encoder only.
4	_HB	Motor Hall B
5	V_SUP_SFTY	Supply for limits input.

Continued next page

Table 32 J5 Encoder, Continued		
Pin	**Name**	**Description**
6	_RL	Right limit
7	_SIN-	Encoder SIN inverted input
8	_COS-	Encoder COS inverted input
9	_SC_I-	Encoder SIN-COS Index inverted input
10	_CHA+/ SQR_SIN+	Digital encoder, channel A non-inverted input, used for both single-ended and differential encoders. Absolute encoder Data+. Squared SIN non inverted output.
11	_CHB+/ SQR_COS+	Digital encoder, channel B non-inverted input, used for both single-ended and differential encoders Absolute encoder CLK+. Squared COS non inverted output.
12	_CHI+	Digital encoder, channel I (index) non inverted input, used for both single-ended and differential encoders
13	X_HA	Motor Hall A
14	X_HC	Motor Hall C
15	_LL	Left limit
16	_SIN+	SIN non inverted input
17	_COS+	Encoder COS non inverted input
18	_SC_I+	Encoder SIN-COS Index non inverted input
19	5U	5 V user supply for digital encoder and Hall sensor
20	5U_RTN	5V return user supply for digital encoder, A return for Motor temperature sensor and Hall
21	NC	Not connected
22	MTMP_#	MTMP Motor temperature sensor
23	MTMP_#_RTN	Return supply for MTMP
24	V_RTN_SFTY	A return for limits input.
25	5F	5V user supply for analog encoder and Hall
26	5F_RTN	5V return user supply for analog encoder and Hall
	SHIELD	Connector shell and front screw

10.5 J5 Encoder Connection Schematics

Table 33. J5 Encoder Connection Schematics	
J5 Encoder: Incremental Digital Encoder (AqB) Connection	Figure 14, page 38
J5 Encoder: Incremental Digital Encoder (CLK-DIR) Connection	Figure 15, page 39
J5 Encoder: SIN-COS Connection	Figure 16, page 39
J5 Encoder: Absolute Encoder Connection	Figure 17, page 40
J5 Encoder: Hall Sensor Input	Figure 18, page 40
J5 Encoder Left and Right Limit Source Connection on “ENCODER 0” Connector	Figure 19, page 41
J5 Encoder Left and Right Limit Sink on “ENCODER 0” Connector	Figure 20, page 42
J5 Encoder Motor Temperature Sensor Connection	Figure 21, page 43

NOTE	**Connecting to the SIN-COS connections on J5 makes the analog inputs on J7 unavailable**. The SIN-COS inputs on J5 share the same internal circuitry in the MDMst as the analog inputs on connector J7.

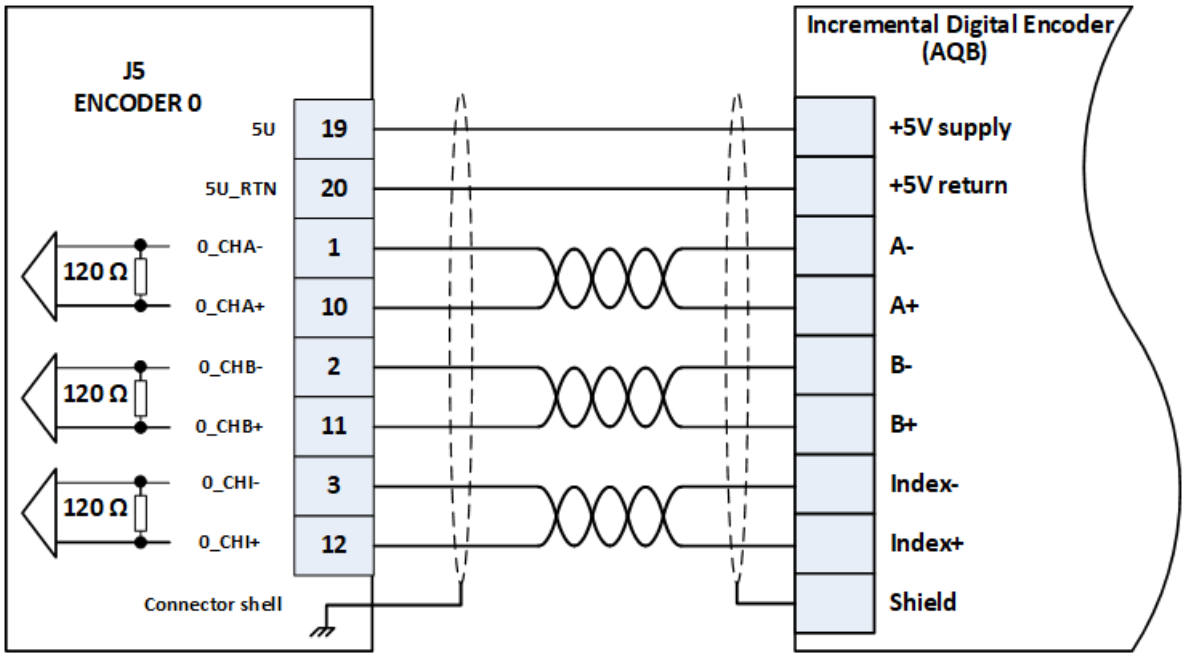

Figure 14. J5 Encoder: Incremental Digital Encoder (AqB) Connection

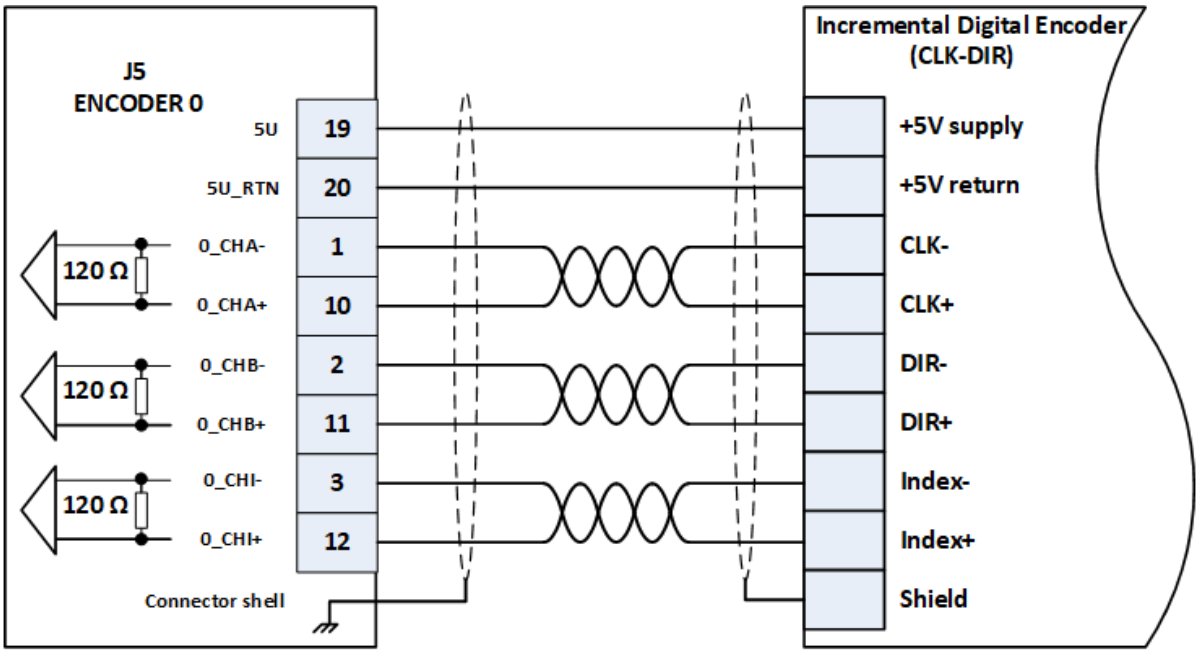

Figure 15. J5 Encoder: Incremental Digital Encoder (CLK-DIR) Connection

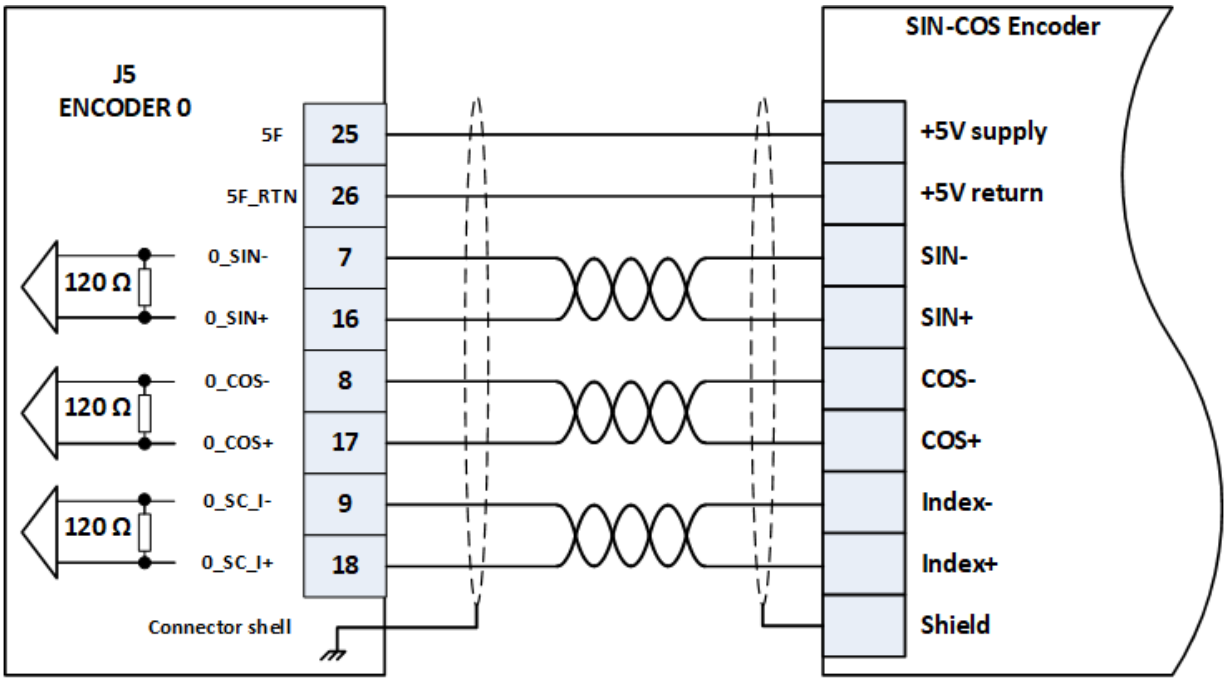

Figure 16. J5 Encoder: SIN-COS Connection

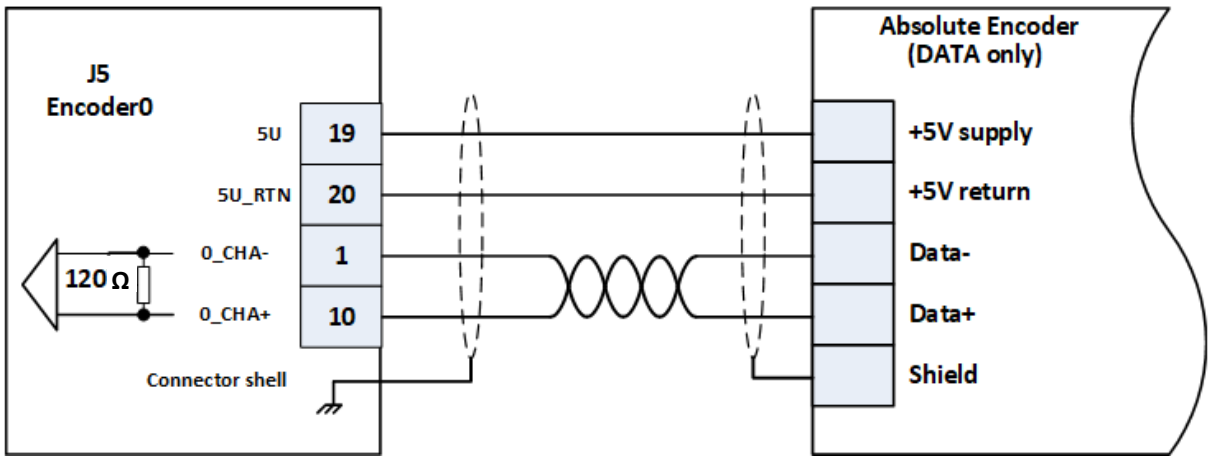

Figure 17. J5 Encoder: Absolute Encoder Connection

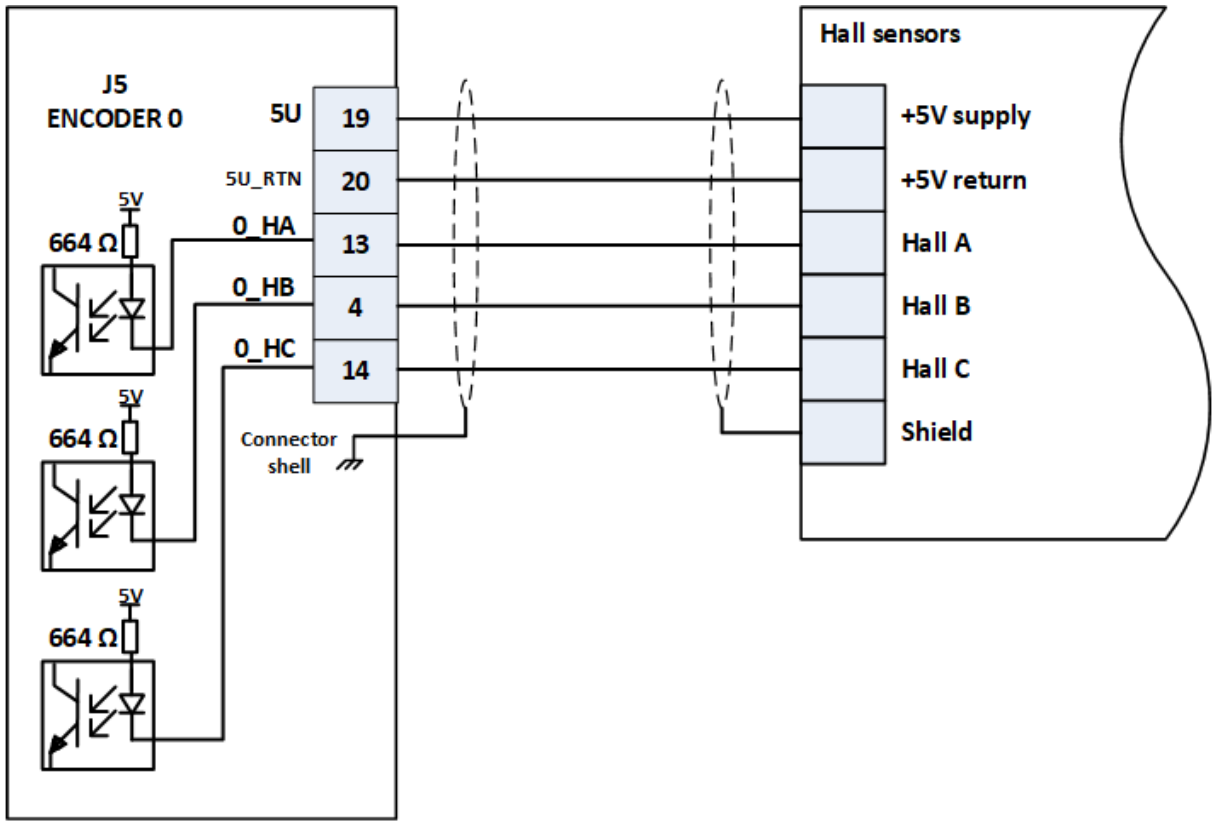

Figure 18. J5 Encoder: Hall Sensor Input

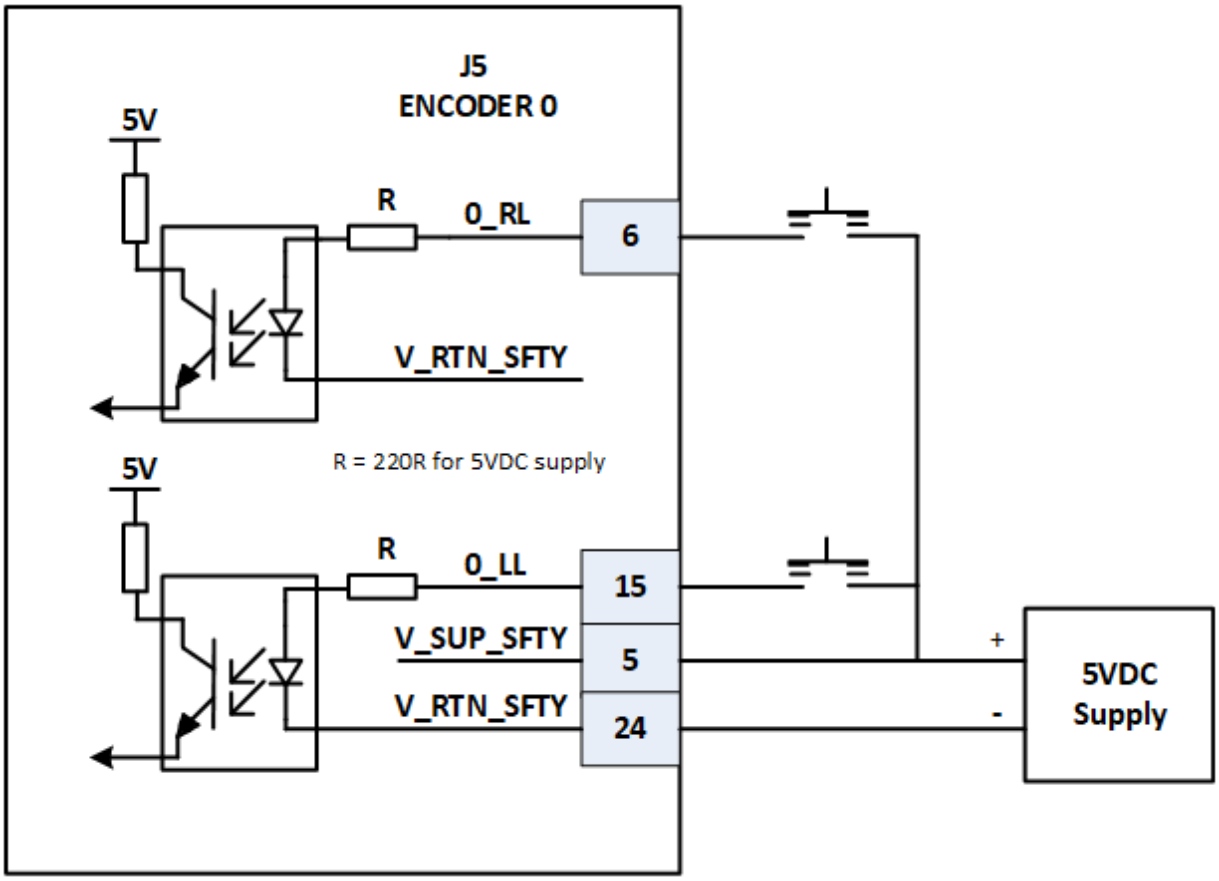

Figure 19. J5 Encoder Left and Right Limit Source Connection on "ENCODER 0" Connector

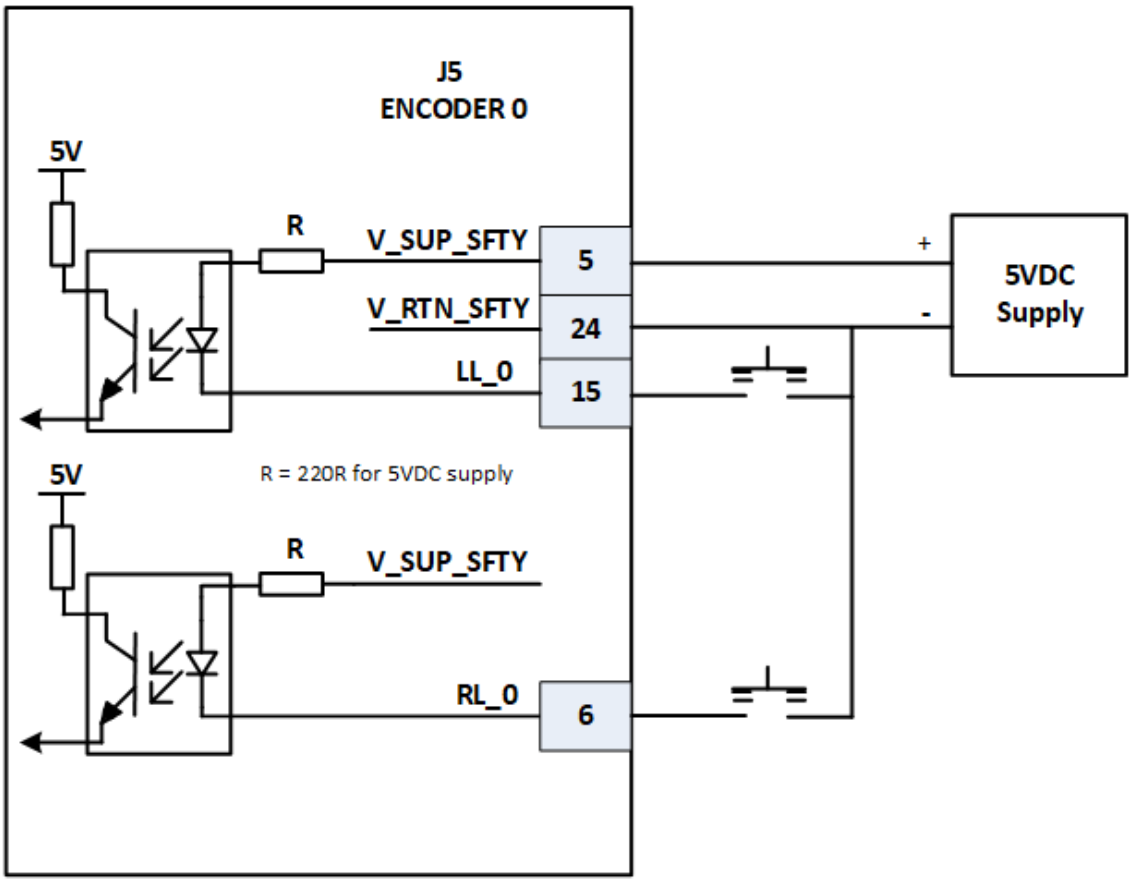

Figure 20. J5 Encoder Left and Right Limit Sink on "ENCODER 0" Connector

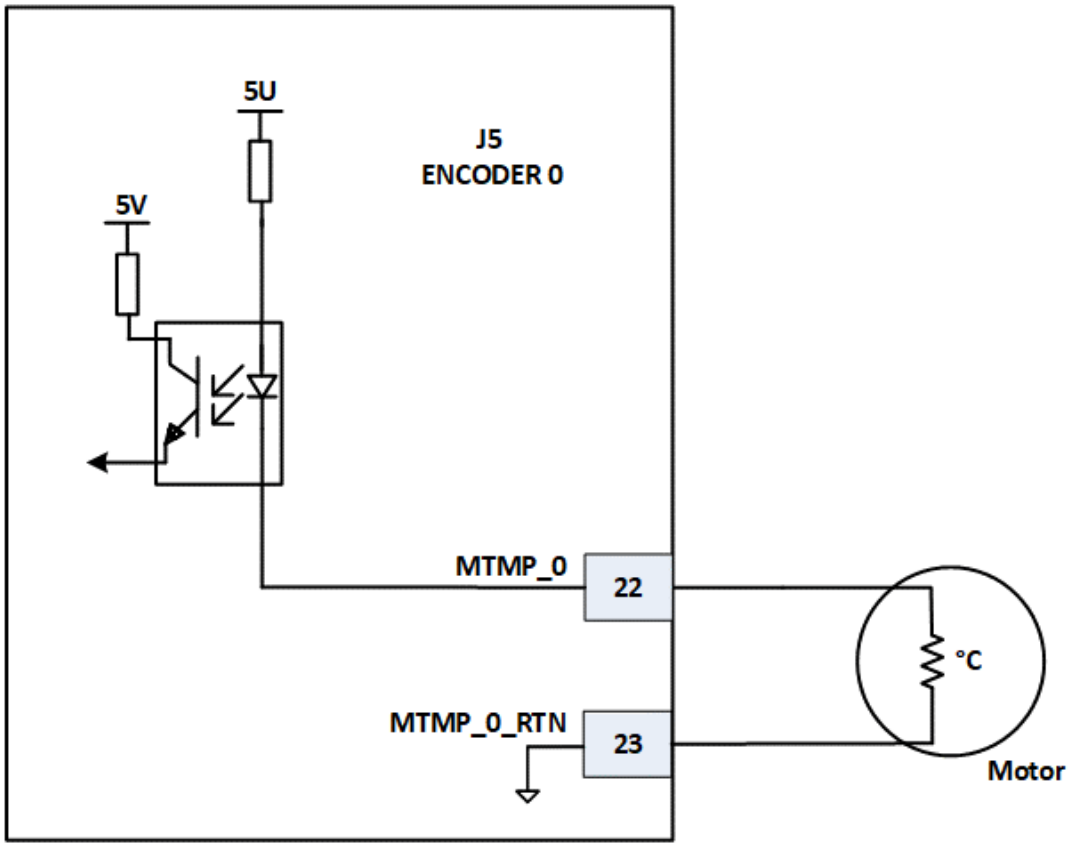

Figure 21. J5 Encoder Motor Temperature Sensor Connection

10.6 J6 Control Supply

An external 24 Vdc isolated power supply (not included with the unit) feeds all logic and control low voltage circuitry.

This power supply should remain active (on) even during emergency stop situations, thus ensuring the continued operation of the network, the controller, the feedback sensors and I/Os.

Control Supply Guidelines

When selecting the control power supply, use the following guidelines:

- The power supply must be isolated.
- The power supply must be CE and UL approved.
- The power supply must be short circuit protected.
- An example of a suitable 24 VDC/50 W power supply is the XP Power, P/N VCS50US24

Figure 22. J6 Control Supply Connector

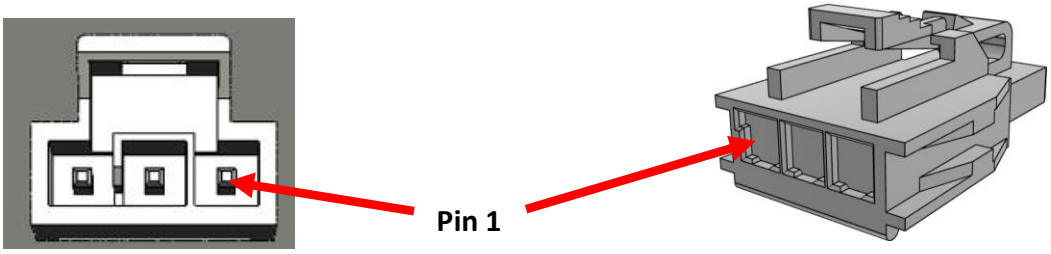

Table 34. J6 Control Supply		
Mating Connector Parts		
Vendor	**MFR P/N**	**Description**
Molex (housing)	1053072203	CON HOUSING 1x3 2.5mm LATCH
Molex (pins)	1053001200	Pins for above housing (for 24 – 26 AWG wire)

Connections		
Pin	**Name**	**Description**
1	24 VDC	+24 Vdc control supply
2	24 V_RTN	24 Vdc control supply return
3	SHIELD	Electrical Ground

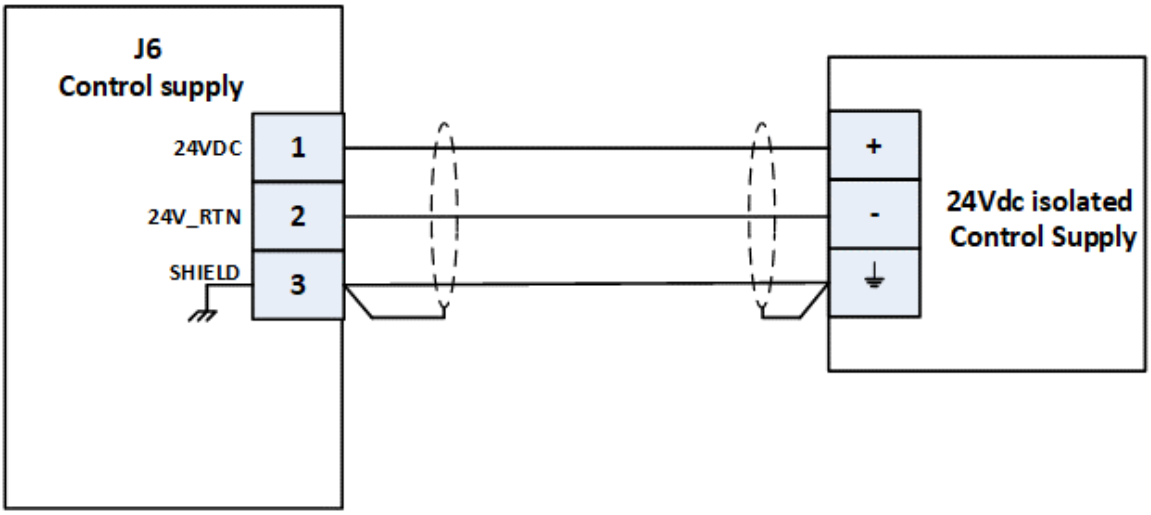

Figure 23. J6: Control Supply Connection

10.7 J7 I/O Connector

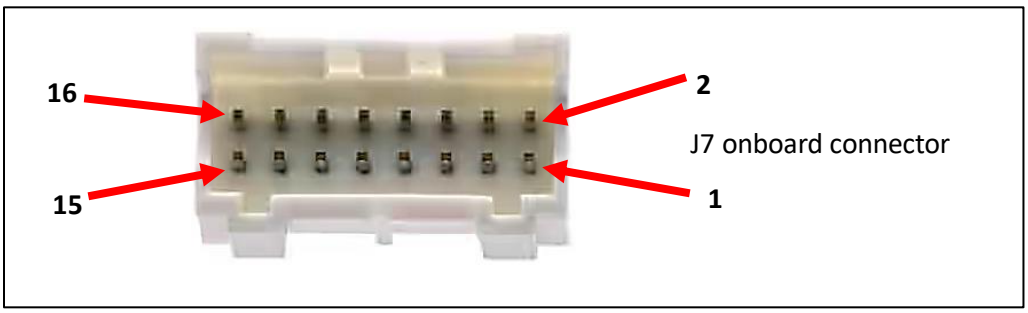

Figure 24. J7 I/O Connector

When building a cable to mate with J7, use the parts listed in Table 35. below, or the electrical and physical equivalent.

Refer to Figure 24 above and Table 35. below to wire the connector that will mate with J7.

Table 35. J7 I/O

Mating Connector Parts		
Vendor	**MFR P/N**	**Description**
JST-JAPAN	PADP-16V-1-S	16 pin 2mm pitch plug
JST-JAPAN	SPH-001T-P0.5L or SPND-001T-C0.5	Pins (use 22-26 AWG wire)

Connections		
Pin	**Designation**	**Description**
1	MARK0+	MARK 0 input non inverted
2	MARK0-	MARK 0 input inverted
3	PEG0+	PEG 0 output non inverted
4	PEG0-	PEG 0 output inverted
5	DGND	Digital ground
6	0_LL	Axis 0 left limit
7	0_RL	Axis 0 left limit

Continued next page

J7 I/O, Continued		
8	V_SUP_SFTY	Safety supply
9	V_RTN_SFTY	Safety supply return
10	AGND	Analog ground
11	AIN0+	GP Analog input 0 non-inverted input
12	AIN0-	GP Analog input 0 inverted input
13	AIN1+	GP Analog input 1 non-inverted input
14	AIN1-	GP Analog input 1 inverted input
15	SHIELD	Shield
16	SHIELD	Shield

10.7.1 J7 Connection Schematics

Table 36. J7 I/O Connection Schematics	
J7 MARK Inputs Connection	Figure 25, page 47
J7 Left and Right Limits Source Connection	Figure 26, page 48
J7 I/O Left and Right Limit Sink Connection on LIMITS Connector	Figure 27, page 49
J7 PEG Outputs Connection	Figure 28, page 50
J7 General Purpose Analog Input Connections	Figure 29, page 51

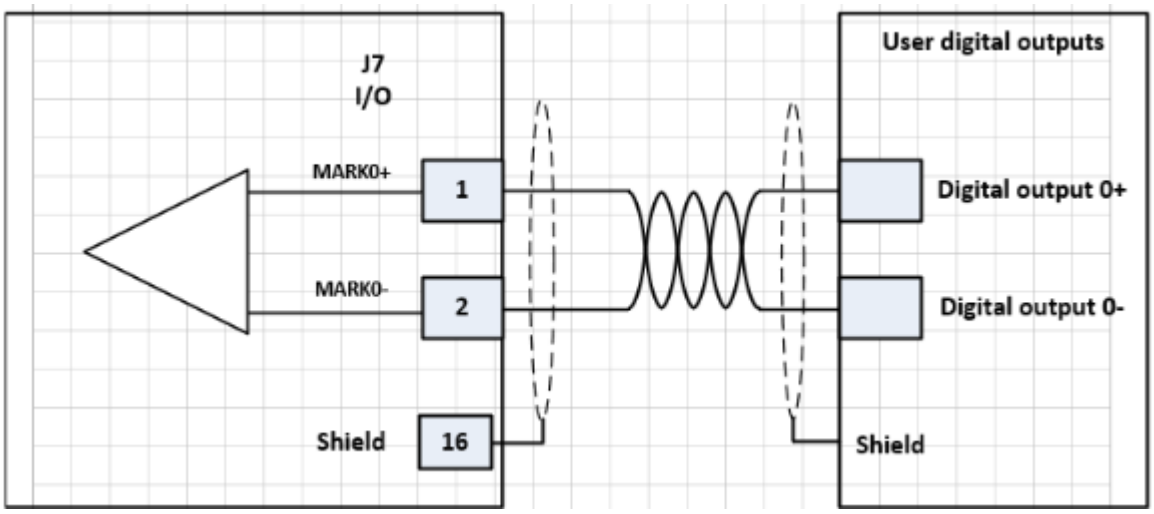

Figure 25. J7 MARK Inputs Connection

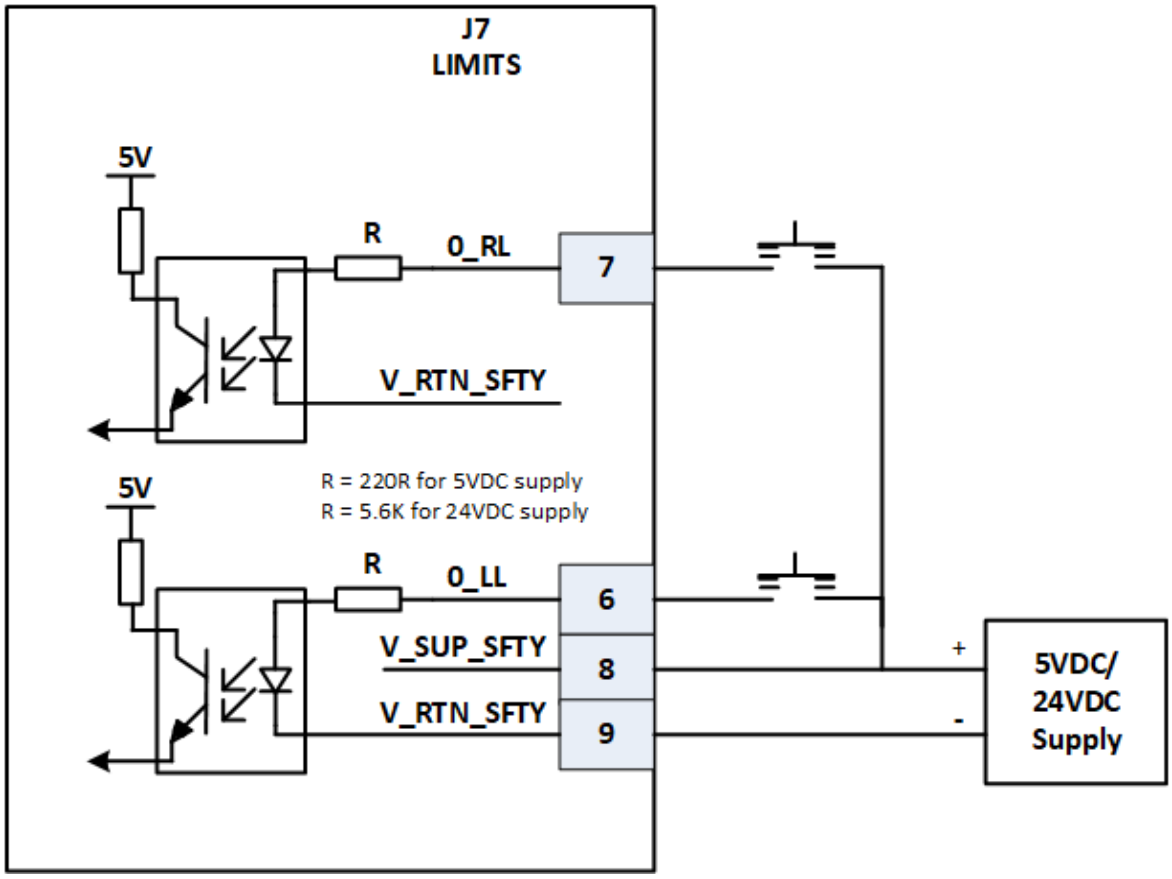

Connect pins 1 and 2 together on JP1.

Figure 26. J7 Left and Right Limits Source Connection

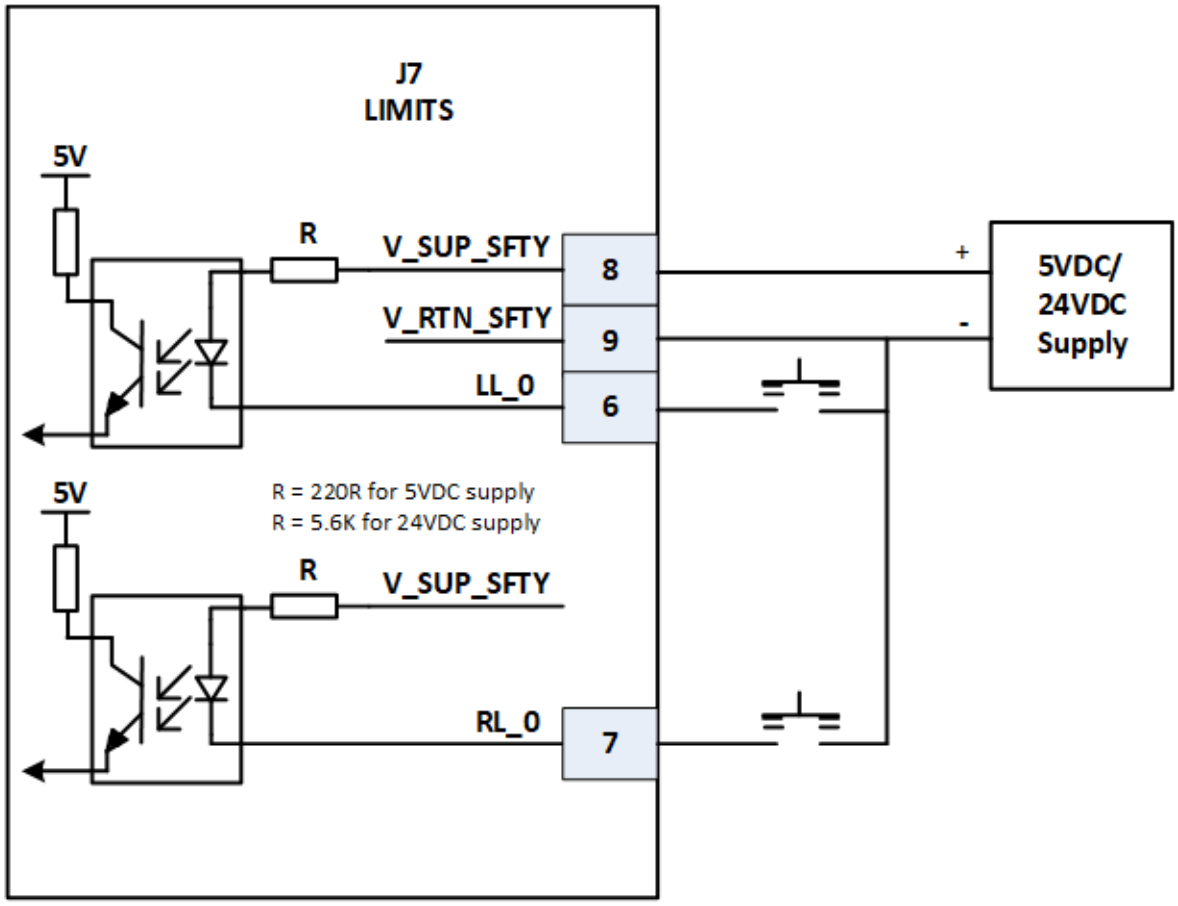

Connect pins 2 and 3 together on JP1.

Figure 27. J7 I/O Left and Right Limit Sink Connection on LIMITS Connector

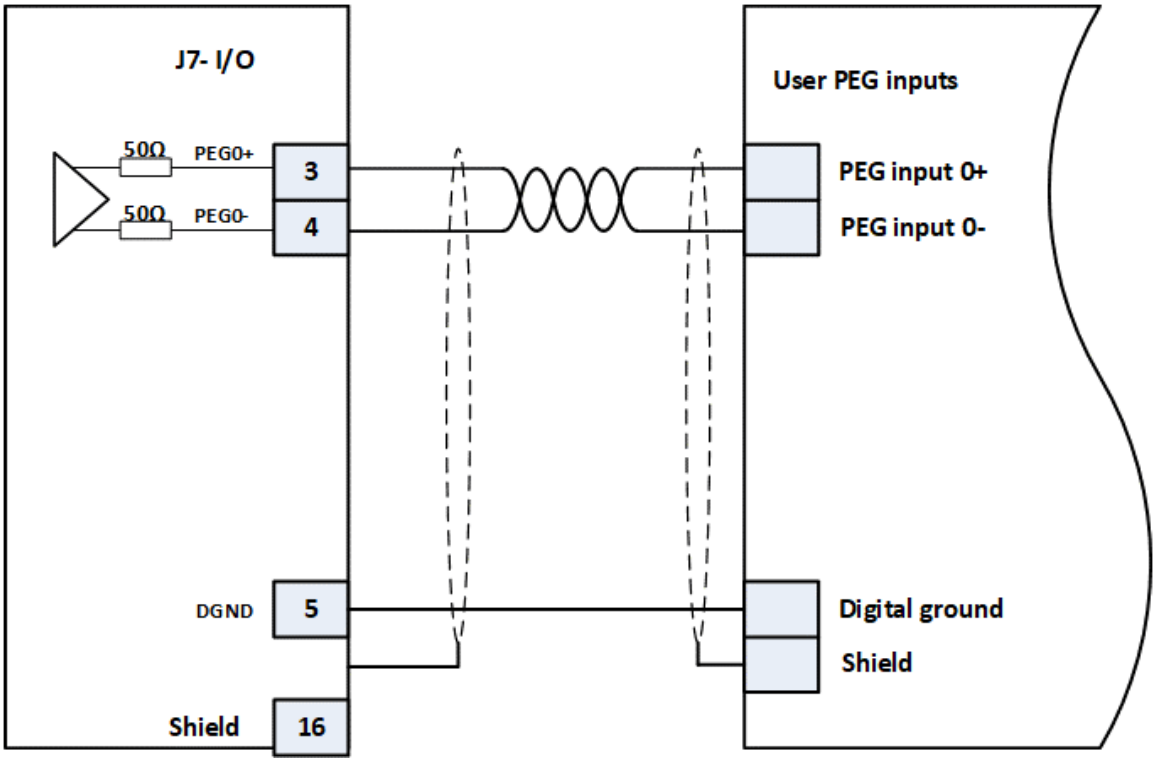

Figure 28. J7 PEG Outputs Connection

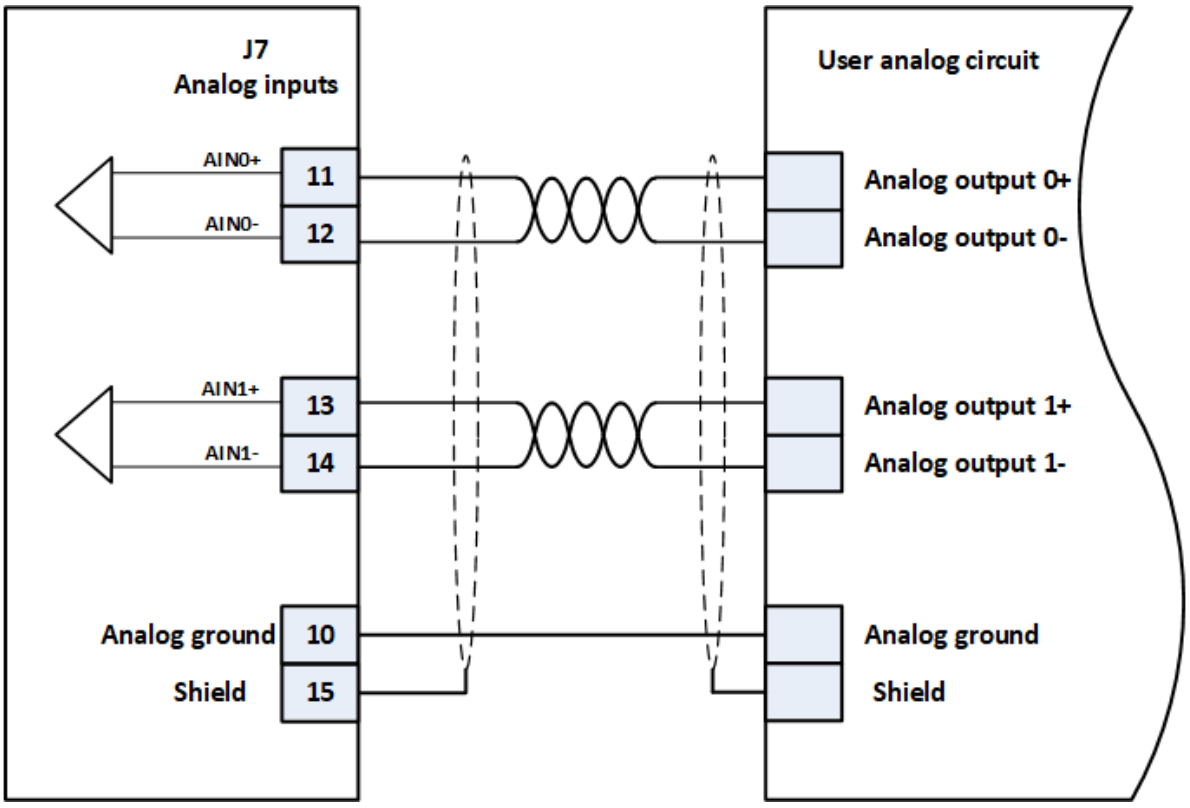

Figure 29. J7 General Purpose Analog Input Connections

10.8 J8 Drive Supply Connector

A customer-supplied power supply must be connected to J8 on the MDMst Panel Mount to provide electrical power to the motor.

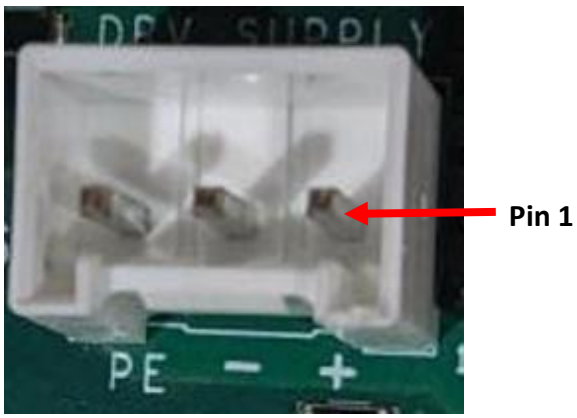

Figure 30. J8 Drive Supply Onboard Connector Pin Numbering

For information about drive supply power, see the following.

- Drive Supply Input on page 17
- Control and Drive Power Supply Guidelines on page 26.

Table 37. J8 Drive Supply Connection

Mating Connector Parts		
Vendor	**MFR P/N**	**Description**
JST-JAPAN	VHR-3N	3 pin 3.96 mm pitch plug
JST-JAPAN	SVH-41T-P1.1	Pins

Connections	
⚠WARNING	Always connect the Drive supply to the MDMst with soft start. Connect the Drive supply to the MDMst BEFORE applying AC power to 48v power supply.

Pin	Name	Description
1	VP+	12-48 Vdc drive supply
2	VP_RTN	Drive supply return
3	EGND (PE)	Protected earth (shield)

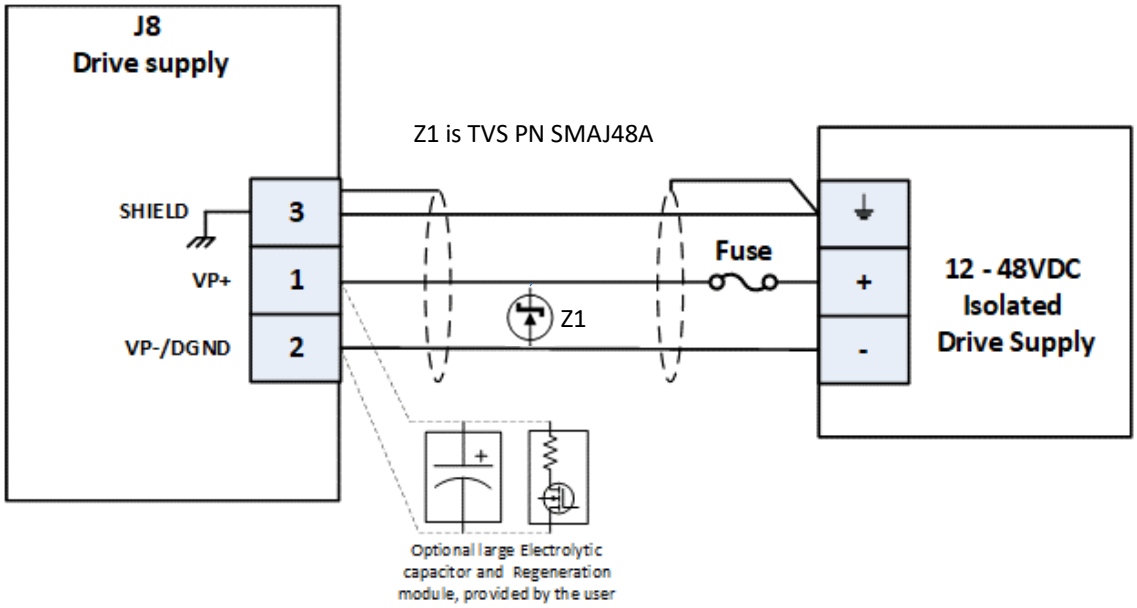

Figure 31. J8 Drive Supply Connection

11 Install the MDMst Panel Mount

The MDMst Panel Mount can be mounted two ways:

- **Attach directly to a panel**: use the dimensions shown in Figure 32 below.
- **DIN Rail**: Using the optional DIN bracket. See Figure 33 on the next page.

This section provides information for physically installing the MDMst Panel Mount. Figure 4 on page 27 shows the connectors on the MDMst Panel Mount

Detailed information for constructing the cables to mate with these connectors is described in Construct Cables for the MDMst Panel Mount on page 27.

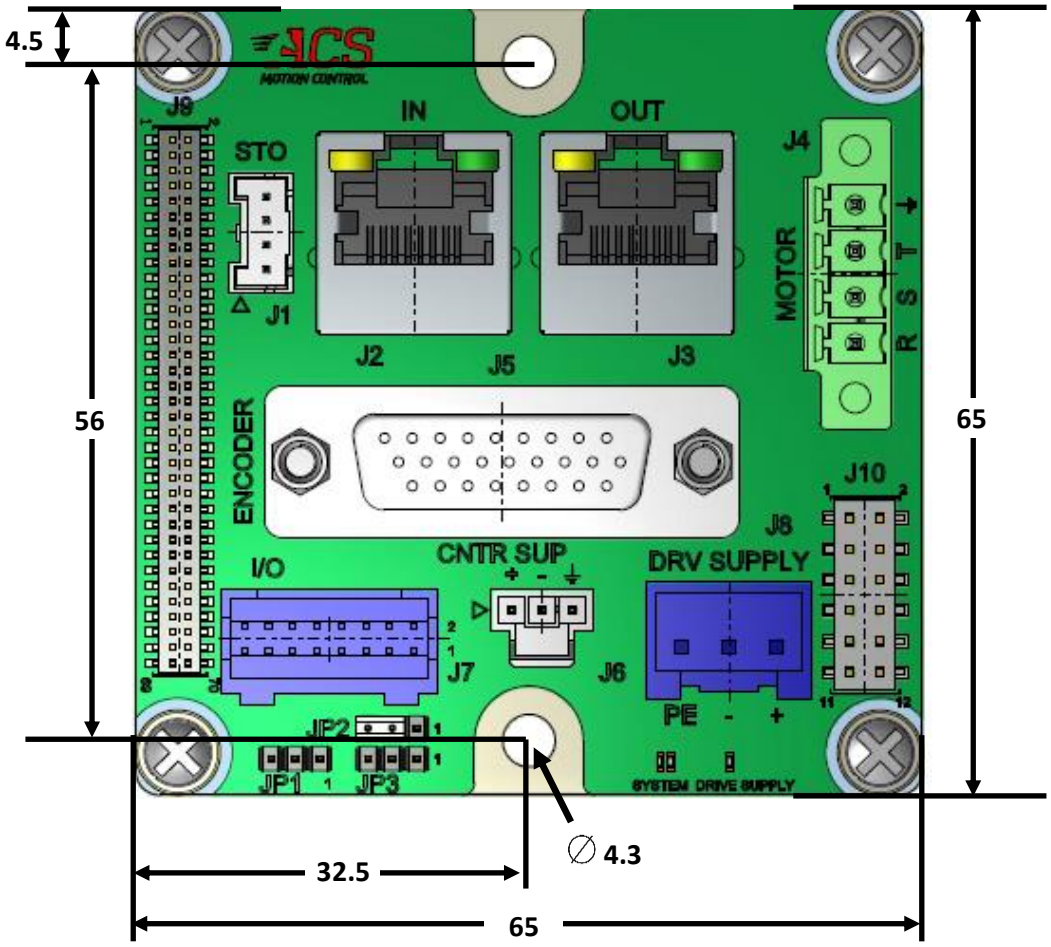

Figure 32. MDMst Panel Mount Dimensions (in mm)

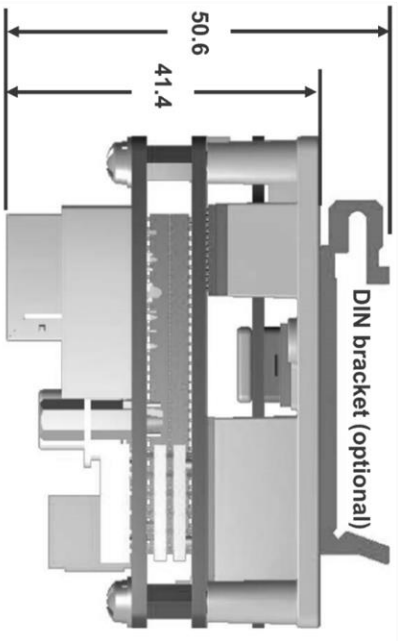

Figure 33. MDMst Panel Mount Side View (With Optional DIN Bracket)

11.1 MDMst Panel Mount Considerations

When installing the MDMst Panel Mount, either on a DIN rail or directly onto a panel, consider the following factors:

Table 38. MDMst Panel Mount Considerations	
⚠WARNING	The MDMst is not intended for use in safety-critical applications (such as life support devices) where a failure of the MDMst can reasonably be expected to cause severe personal injury or death.
Leave enough clearance around the unit to allow for cable routing and free air flow for cooling.	
The rated temperature range of operation of the MDMst is 0 to + 50° C. Above 40º C ambient, forced-air cooling of 8.2 CFM should be used to cool the MDMst	
When fabricating the cables that connect the MDMst to external devices, observe the following: • Use shielded cables with braided shield of at least 80%-95% coverage. • Control supply wire gauge recommendation: 24 AWG, non-twisted pair • Drive supply wire gauge recommendation: minimum 18 AWG, non-twisted pair	

12 Connect and Power Up the MDMst Panel Mount

After the MDMst Panel Mount has been mechanically secured to either panel or DIN rail (with the optional DIN bracket), the cables can be tested and connected to it.

Construction of the cables that connect to the MDMst Panel Mount were described in the previous section.

	**Verify that all devices that will be connected in this section are not electrically energized! If necessary, use Lockout / Tagout procedures to ensure the equipment is de-energized.**
	**Test the cables for continuity and short circuits before proceeding to avoid damage to the equipment.**

12.1 MDMst Panel Mount User Jumpers

Jumpers JP1, JP2, and JP3 are user-selectable and provide the functions shown in the table below. See Figure 34 below for the location and pin numbering of the jumpers. Set these jumpers before the application of electrical power.

Table 39. Jumpers on the MDMst Panel Mount

Connector	Function	Position 1 – 2	Position 2 – 3
JP1	Sink / Source selection for Safety Inputs	Source input type (default)	Sink input type
JP2, JP3	STO	STO Enabled (default, as shipped from factory)	STO Disabled

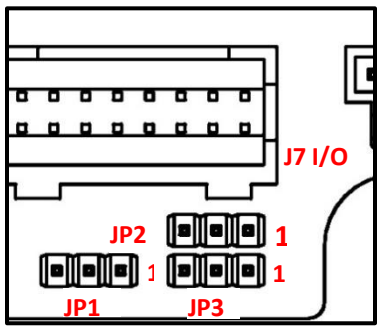

Figure 34. Close-up Location of Jumpers and Pin Numbers

12.2 Connect and Apply Electrical Power to the MDMst Panel Mount

Table 40. Connect and Apply Electrical Power to the MDMst Panel Mount	
Step	**Action**
1	On the MDMst, connect the cable that plugs into J6 Control Power Supply.
2	Apply electrical power to the Control Power Supply.
3	On the MDMst, connect the cable that plugs into J8 Motor Power Supply.
4	Apply electrical power to the Motor Power Supply. If the fuse that protects the Motor Power Supply opens (blows), correct the problem before proceeding to the next step.
5	**TURN OFF** the Control and Motor Power supplies to the MDMst.
6	Plug the remaining cables into the MDMst.
7	Apply electrical power to the Control Power Supply.
8	Apply electrical power to the Motor Power Supply. If the fuse that protects the Motor Power Supply opens (blows), correct the problem before proceeding to the next step.
Stop. Go to Setup the EtherCAT Network on page 58.	

13 Setup the EtherCAT Network

Upon completion of installing the MDMst and associated cables, you can set up the EtherCAT network that the MDMst connects to. The two things described below will help you accomplish this task:

- SPiiPlus Application Development Kit (ADK) Suite. This application must be installed on a computer that connects to the MDMst. You can download this application from the ACS website at the following link:
  https://www.acsmotioncontrol.com/resources/downloads/spiiplus-adk-suite/

- SPiiPlus Quick Start Guide provides information for setting up the EtherCAT network and associated hardware. It is available at the ACS website at the following link:
  https://www.acsmotioncontrol.com/resources/downloads/spiiplus-adk-suite/

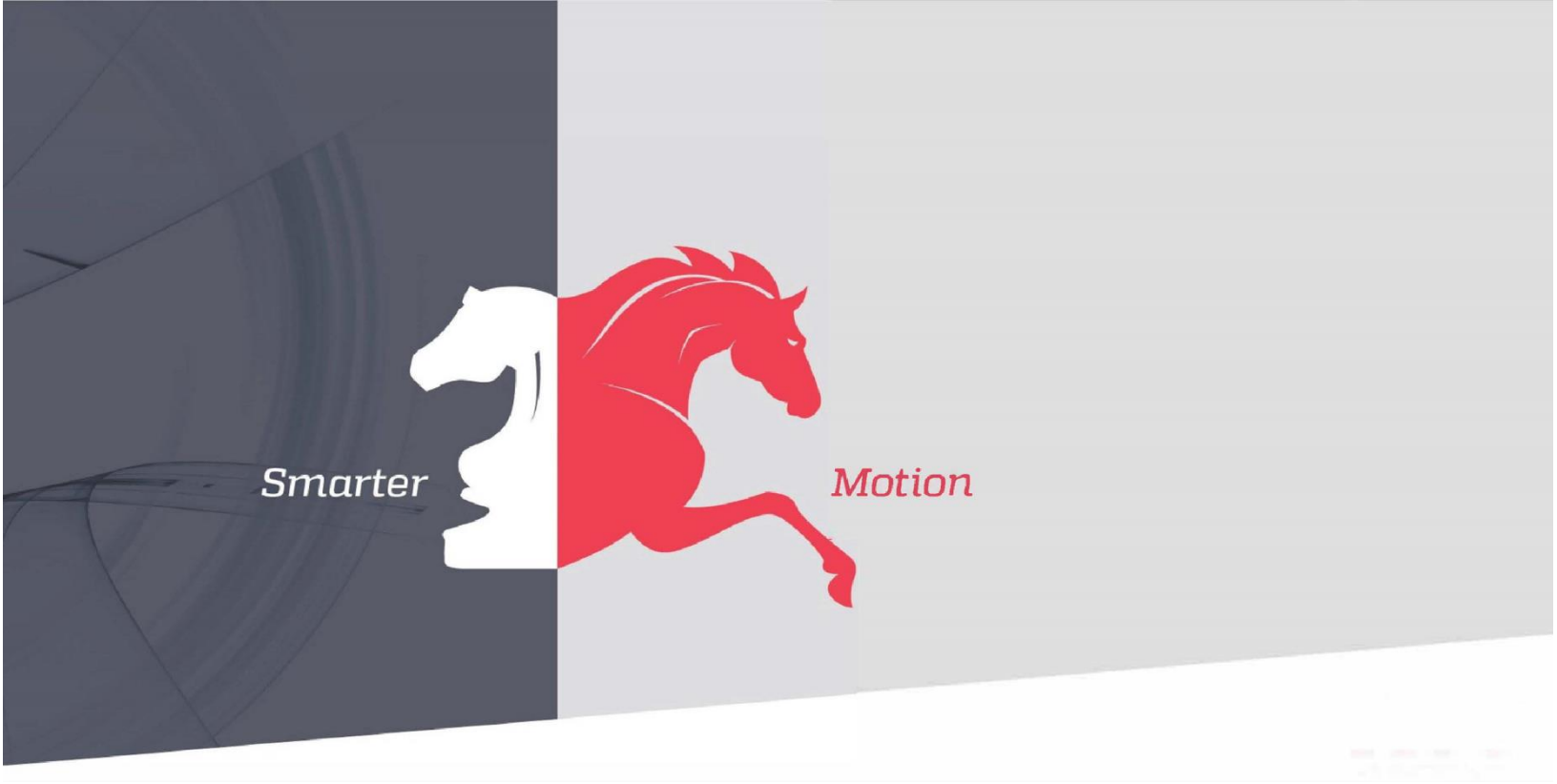

5 HaTnufa St.
Yokne'am Illit 2066717
Israel
Tel: (+972) (4) 654 6440 Fax: (+972) (4) 654 6443

ACS MOTION CONTROL