Manual No. 100-5320-01
Rev. 6

404/406XR Series Product Manual

Effective: March 5, 2007
Supersedes: January 12, 2006

Electromechanical Positioning Systems

Important User Information

WARNING

FAILURE OR IMPROPER SELECTION OR IMPROPER USE OF THE PRODUCTS AND/OR SYSTEMS DESCRIBED HEREIN OR RELATED ITEMS CAN CAUSE DEATH, PERSONAL INJURY AND PROPERTY DAMAGE.

This document and other information from Parker Hannifin Corporation, its subsidiaries, and authorized distributors provide product and/or system options for further investigation by users having technical expertise. It is important that you analyze all aspects of your application and review the information concerning the product or system in the current product catalog. Due to the variety of operating conditions and applications for these products or systems, the user, through its own analysis and testing, is solely responsible for making the final selection of the products and systems and assuring that all performance, safety and warning requirements of the application are met.

The products described herein, including without limitation, product features, specifications, designs, availability and pricing, are subject to change by Parker Hannifin Corporation and its subsidiaries at any time without notice.

The information in the product manual, including any apparatus, methods, techniques, and concepts described herein, are the proprietary property of Parker Hannifin Corporation or its licensors, and may not be copied, disclosed, or used for any purpose not expressly authorized by the owner thereof.

Since Parker Hannifin Corporation constantly strives to improve all of its products, we reserve the right to change this product manual and equipment mentioned therein at any time without notice.

For assistance contact:
Parker Hannifin Corporation
1140 Sandy Hill Road
Irwin, PA 15642
Phone: 724/861-8200
800/245-6903
Fax: 724/861-3330
E-mail: ddlcat@parker.com
Web site: www.parkermotion.com

404/406XR Series Product Manual

Table of Contents

REVISION NOTES **4**
CHAPTER 1 - INTRODUCTION **5**
PRODUCT DESCRIPTION 5
UNPACKING 5
RETURN INFORMATION 6
REPAIR INFORMATION 6
WARNINGS AND PRECAUTIONS 6
SPECIFICATION CONDITIONS AND CONVERSIONS 6
ASSEMBLY DIAGRAMS 7
CHAPTER 2 - 404/406XR SERIES TABLE SPECIFICATIONS **8**
ORDER NUMBER NOMENCLATURE 8
DIMENSIONAL DRAWINGS 12
GENERAL TABLE SPECIFICATIONS 14
CHAPTER 3 - COMPONENT SPECIFICATIONS **19**
LINEAR ENCODERS 19
Z-Channel Position Reference *19*
Linear Encoder Speed Limit *20*
Linear Encoder Wiring Diagram *20*
ROTARY ENCODERS 21
Rotary Encoder Wiring Diagram *21*
BRAKES 21
LIMIT & HOME SENSORS 22
SENSOR PACK CABLE WIRING DIAGRAM 22
COUPLINGS 23
CHAPTER 4 - BASE MOUNTING PROCEDURES **24**
MOUNTING SURFACE REQUIREMENTS 24
BASE MOUNTING METHODS 24
Base thru holes *24*
Toe clamp mounting *25*
Riser Blocks *25*
CHAPTER 5 - COMPONENT MOUNTING PROCEDURES **26**
CENTER DRIVE MOTOR MOUNTING 26
PARALLEL MOTOR MOUNTING 26
LIMIT/HOME SENSOR MOUNTING PROCEDURE 30
BRAKE MOUNTING 31
ROTARY ENCODER MOUNTING 32
CHAPTER 6 - MAINTENANCE AND LUBRICATION **33**
INTERNAL ACCESS PROCEDURE 33
SQUARE RAIL BEARING LUBRICATION 35
GROUND BALLSCREW LUBRICATION 36
AIR PURGE HOLE 37
APPENDIX A - INTERNAL PROTECTION **38**
Using the "IP Ship Kit" *39*
APPENDIX B - ACCESSORIES & SPARE PARTS **40**
APPENDIX C - CLEAN ROOM **44**
APPENDIX D - MULTI-AXIS CONFIGURATIONS **46**
MOUNTING BRACKETS 46
PINNING 46
INDEX **47**

Parker Hannifin Corporation
1140 Sandy Hill Road
Irwin, PA 15642

Revision Notes

Rev. 2 – Effective May 29, 2002 – Added Revision Notes, updated order number nomenclature, dimensional drawings, table specifications, life/load charts, brake information, accessories and spare parts, added limit and home sensor pack information and easy lube information.

Rev. 3 – Effective August 22, 2002 – Updated brake mounting procedure.

Rev. 4 – Effective November 17, 2004 - Modified Limit & Home Sensors section to include new 4 wire sensor. Changed all logos to Parker only. Changed web address to www.parkermotion.com and removed division name from company address.

Rev. 5 – Effective January 12, 2006 – Section 6 – Maintenance and Lubrication - Changed grease from Mobil XHP222 to Multemp PS#2 for lubricating square rail bearings, and ball screws in the R1 and R5 (R5 only available for 404XR) class 1000 clean room preparation. Updated specifications on page 14, deleted screw speed chart previously on page 19, Changed pictures for internal access pages 33 and 34, updated encoder wiring information for RGH24 on page 20.

Rev. 6 – Effective March 5, 2007 - Section 6 – Maintenance and Lubrication – Added Alvania RL 2 for lubricating square rail bearings, and ball screws in the R1 and R5 class 1000 clean room preparation for 406XR Series Tables.

Parker Hannifin Corporation
1140 Sandy Hill Road
Irwin, PA 15642

Chapter 1 - Introduction

Product Description

404XR Positioner

The 404XR is a sleek compact positioner (47.3 x 95 mm) capable of carrying relatively high loads up to a distance of 600 mm. Its quick and accurate positioning capability can be attributed to a high strength extruded housing, square rail ball bearing system, and precision ground ballscrew drive. With its low profile design, the 404XR is ideal for space restricted applications and its light weight construction makes it well suited for multi-axis systems.

406XR Positioner

The 406XR is the rugged big brother of the 404XR Series. It can position greater loads (up to 630 kgf) over longer (2 meters) travels. Because of its size and strength (28 kg-m, 200 lb-ft. moment load capacity) this durable table is ideal as the base unit in a multi-axis system. From high resolution to high throughput, selectable ballscrew leads (5, 10, 20, 25 mm) make the desired resolution/velocity ratio easy to achieve, and stainless steel seal strips alleviate environmental concerns.

400XR Product Family

'Modular Flexibility' is the attribute that clearly distinguishes the 400XR family of linear tables from all others. This product family allows each unit to be easily configured to meet unique requirements, from the very basic to the highly complex. Field upgrades and redesigns are easily accommodated; simply follow the mounting procedure that ships with the desired assembly or individual part. This compatible family of positioners offers reliable accuracy, versatility and strength. Adapters and brackets make it easy to combine 404XR and 406XR positioners, as required, to form multi-axis systems without special design or manufacturing. The 400XR family of products are rugged enough to perform well in the industrial automation environment (automotive, packaging) and yet they're precise enough to excel in the high end semi-conductor and instrumentation markets.

Unpacking


Unpacking

Carefully remove the positioner from the shipping crate and inspect the unit for any evidence of shipping damage. Report any damage immediately to your local authorized distributor. Please save the shipping crate for damage inspection or future transportation.

Incorrect handling of the positioner may adversely affect the performance of the unit in its application. Please observe the following guidelines for handling and mounting of your new positioner.

- DO NOT allow the positioner to drop onto the mounting surface. Dropping the positioner can generate impact loads that may result in flat spots on bearing surfaces or misalignment of drive components.
- DO NOT drill holes into the positioner. Drilling holes into the positioner can generate particles and machining forces that may effect the operation of the positioner. Parker Hannifin Corporation will drill holes if necessary; contact your local authorized distributor.
- DO NOT subject the unit to impact loads such as hammering, riveting, etc. Impacts loads generated by hammering or riveting may result in flat spots on bearing surfaces or misalignment of drive components.
- DO NOT push in magnetically retained strip seals when removing positioner from shipping crate. Damaging strip seals may create additional friction during travel and may jeopardize the ability of the strip seals to protect the interior of the positioner.
- DO NOT submerge the positioner in liquids.
- DO NOT disassemble positioner. Unauthorized adjustments may alter the positioner's specifications and void the product warranty.

Parker Hannifin Corporation
1140 Sandy Hill Road
Irwin, PA 15642

Return Information

Returns
All returns must reference a "*R*eturn *M*aterial *A*uthorization", *(RMA)*, number. Please call your local authorized distributor or Parker Hannifin Corporation Customer Service Department at 800-245-6903 to obtain a "RMA" number. See Parker Hannifin Corporation Catalog #8080/USA, page D34, for additional information on returns and warranty.

Repair Information

Out-of-Warranty Repair
Our Customer Service Department repairs Out-of-Warranty products. All returns must reference a "RMA" number. Please call your local authorized distributor or Parker Hannifin Corporation Customer Service Department at 800-245-6903 to obtain a "RMA" number. You will be notified of any cost prior to making the repair.

Warnings and Precautions



Vertical Operation

Depending upon your load and ballscrew selection the carriage and load may 'backdrive' in power loss situations potentially causing product damage or personal injury. An electro-mechanical brake, which will activate in response to a loss of power (option 'B2'), can be used to prevent potential product damage or personal injury.



Strain Relieve Electrical Components

All electrical components (such as brakes, encoders, and limit/home switches) must be strain relieved. Failure to strain relieve electrical wires or cables may result in component failure and/or possible personal injury.

Specification Conditions and Conversions

Specifications are Temperature Dependent
Catalog Specifications are obtained and measured at 20 Degrees C. Specifications at any other temperature may *deviate* from catalog specifications. Minimum to Maximum continuous operating *temperature range* (with NO guarantee of any specification except motion) of a standard unit before failure is 5 - 70 Degrees C. Certain components can be eliminated or substituted to improve operation at these temperatures. Positioners with low temperature or high temperature components will be handled as specials, contact your local distributor.

Specifications are Mounting Surface Dependent
Catalog Specifications are obtained and measured when the positioner is *fully supported*, *bolted down* (to eliminate any extrusion deviation), and is mounted to a work surface that has a *maximum flatness error of 0.013mm/300mm (0.0005"/ft).*

Specifications are Point of Measurement Dependent
Catalog Specifications and Specifications in this manual are measured in the center of the carriage, 37.5mm above the carriage surface. All measurements taken at any other location may deviate from these values.

Parker Hannifin Corporation
1140 Sandy Hill Road
Irwin, PA 15642

Assembly Diagrams

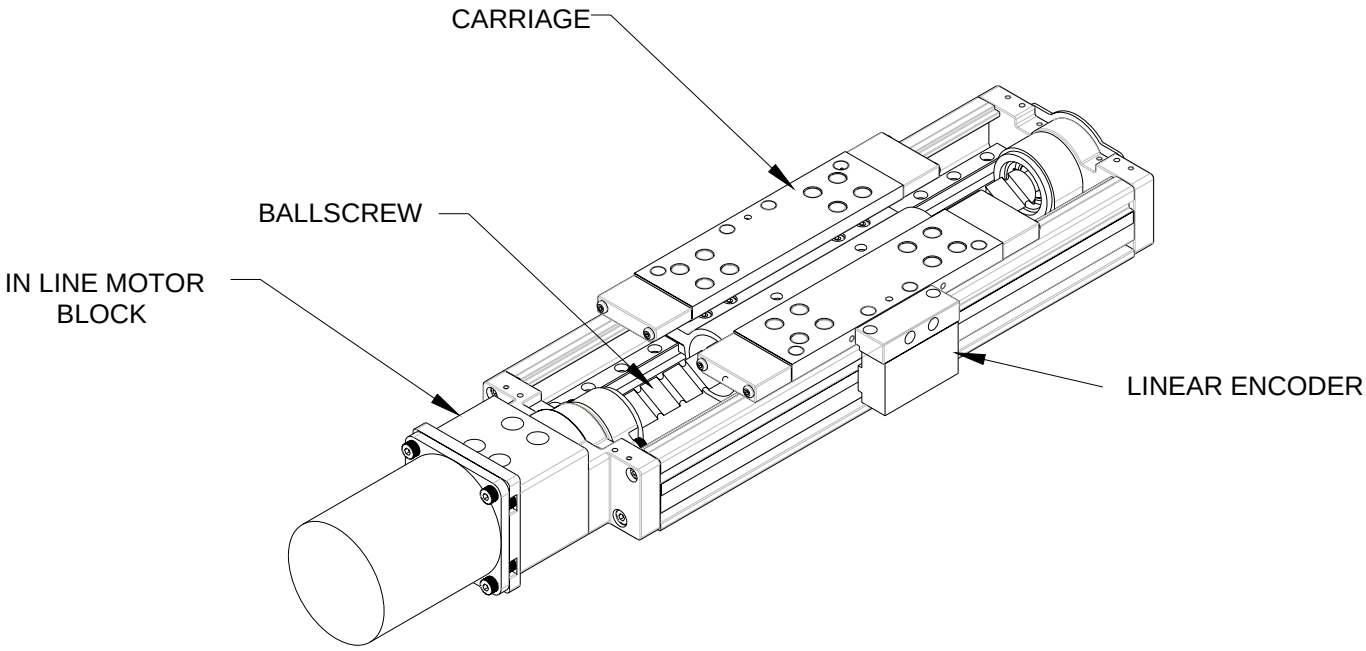

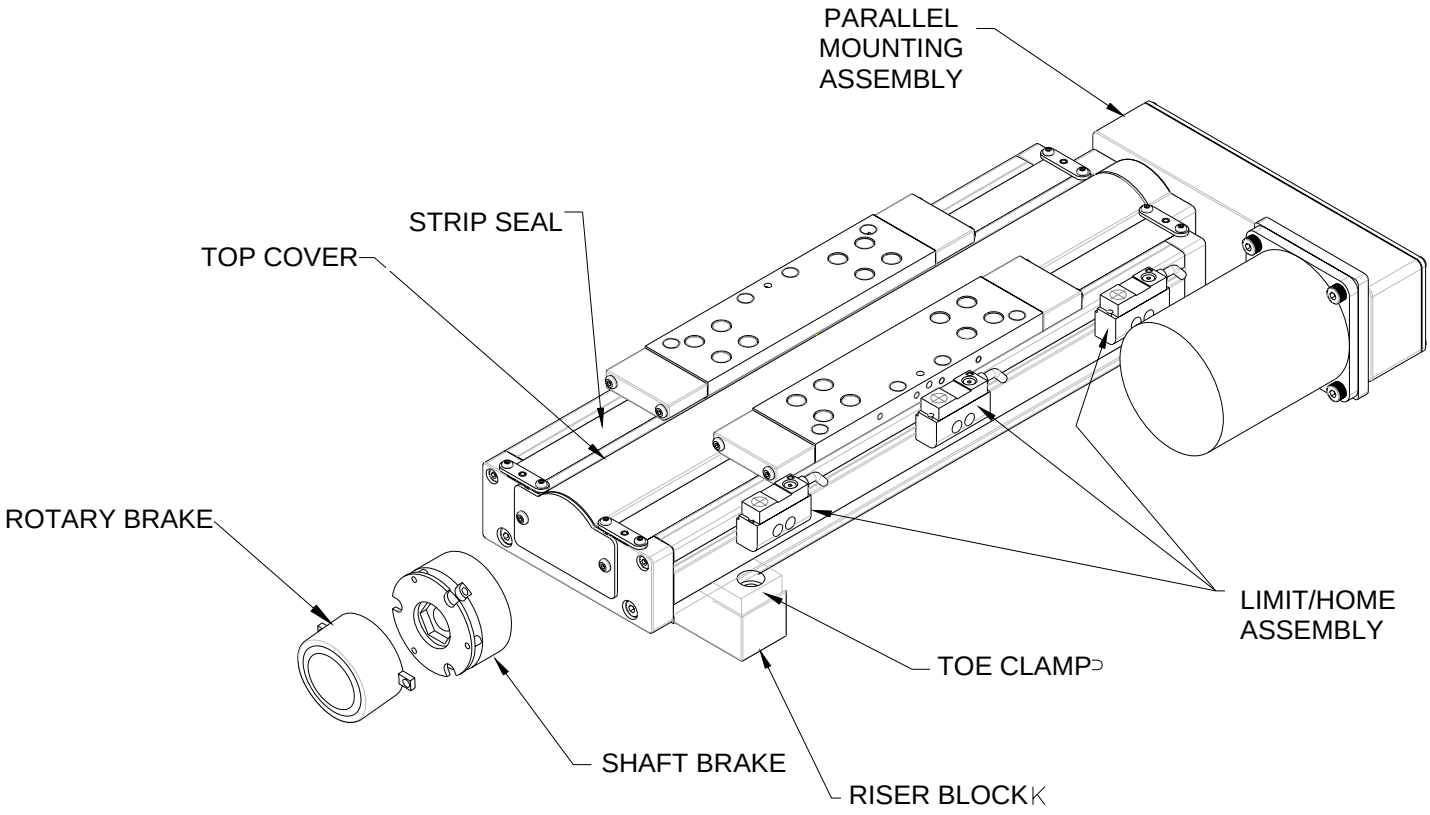

Parker Hannifin Corporation
1140 Sandy Hill Road
Irwin, PA 15642

Chapter 2 – 404/406XR Series Specifications

Order Number Nomenclature

404XR Series - How to Order

Order Example: 404 | 450 | XR | M | S | – | D33 | – | H4 | L9

Model Series 404

Table Travel

50 mm	50	350 mm	350
100 mm	100	400 mm	400
150 mm	150	450 mm	450
200 mm	200	500 mm	500
250 mm	250	550 mm	550
300 mm	300	600 mm	600

Table Style ..... XR

Mounting (Metric) ..... M

Grade

Precision grade	P
Standard grade	S

Drive Screw

Free travel	D1	1 mm V thread leadscrew	D31
5 mm ballscrew	D2	2 mm V thread leadscrew	D32
10 mm ballscrew	D3	5 mm V thread leadscrew	D33
20 mm ballscrew		.10" V thread leadscrew	D34
(standard grade only)	D4	.10" acme thread leadscrew	D35

Home Sensor Ass'y. (one sensor)

No home sensor	H1
N.C. current sinking, flying leads	H2
N.O. current sinking, flying leads	H3
N.C. current sourcing, flying leads	H4
N.O. current sourcing, flying leads	H5
N.C. current sinking, w/locking connector	H6
N.O. current sinking, w/locking connector	H7
N.C. current sourcing, w/locking connector	H8
N.O. current sourcing, w/locking connector	H9
N.C. current sinking-sensor pack	H11
N.O. current sinking-sensor pack	H12
N.C. current sourcing-sensor pack	H13
N.O. current sourcing-sensor pack	H14



Travel Limit Sensor Ass'y (two sensors)

No limit sensors	L1	N.C. current sourcing, w/locking connector	L8
N.C. current sinking, flying leads	L2	N.O. current sourcing, w/locking connector	L9
N.O. current sinking, flying leads	L3	N.C. current sinking-sensor pack	L11
N.C. current sourcing, flying leads	L4	N.O. current sinking-sensor pack	L12
N.O. current sourcing, flying leads	L5	N.C. current sourcing-sensor pack	L13
N.C. current sinking, w/locking connector	L6	N.O. current sourcing-sensor pack	L14
N.O. current sinking, w/locking connector	L7		

Note: Sensors with locking connector include 5 meter extension cable.

Parker Hannifin Corporation
1140 Sandy Hill Road
Irwin, PA 15642

C3 M4 E1 B1 R1 P1

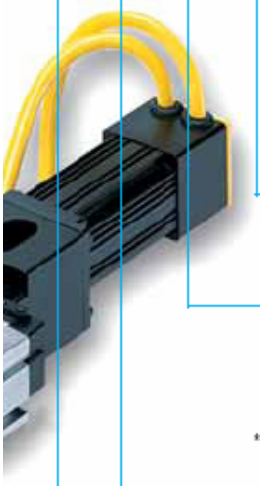

Pinning Options

P1	No multi-axis pinning
P2	X axis transfer pinning to Y or Z axis - 30 arc seconds
P3	Y axis transfer pinning to X axis - 30 arc seconds
P4	Z axis transfer pinning to X axis - 30 arc seconds
P5	X axis standard pinning to Y axis - 125 arc seconds
P6	Y axis standard pinning to X axis - 125 arc seconds

Cleanroom Preparation

R1	Class 1000 compatible (standard)
R2	Class 10 compatible (consult factory for details)
R5	Class 1000 (Std.) with easy lube system
R7	Class 1000 with external stainless hardware
R8	Class 10 with external stainless hardware
R9	Class 1000 with easy lube system & external stainless hardware

Brake Option

B1	No brake
B2	Shaft brake**

**Brake option cannot be used in conjunction with Rotary encoder option. Refer to holding torque chart (page B15) to confirm maximum load.

Encoder Option

E1	No encoder
E2	Linear encoder (tape scale) 1 micron
E3	Linear encoder (tape scale) 0.5 micron
E4	Linear encoder (tape scale) 0.1 micron
E5	Rotary shaft encoder**

Motor Mount***

*** See page B22 for maximum allowable motor shaft diameter. Parallel motor mounts are not available with leadscrew drives.

M1	No motor mount
M2	SM 16 - In-line mounting
M3	NEMA 23 & SM 23 - In-line mounting
M4	NEMA 34 - In-line mounting
M5	SM16 - Parallel mounting, "A" location
M6	SM16 - Parallel mounting, "B" location
M7	SM16 - Parallel mounting, "C" location
M8	NEMA 23 - Parallel mounting, "A" location
M9	NEMA 23 - Parallel mounting, "B" location
M10	NEMA 23 - Parallel mounting, "C" location
M11	SM23 - Parallel mounting, "A" location
M12	SM23 - Parallel mounting, "B" location
M13	SM23 - Parallel mounting, "C" location
M21	Neometric 70 - In-line mounting
M37	NEMA 17 - In-line mounting
M42	SM232AQ-NPSN Servo motor - In-line mtg.
M46	HV232-02-10 Stepper Motor - In-line mtg.
M49	Handcrank / no read out
M50	Handcrank w/ read out (0.10 or 1 mm leads only)
M61	BE23 - In-line mounting
M62	BE23 - Parallel mounting, "A" location
M63	BE23 - Parallel mounting, "B" location
M64	BE23 - Parallel mounting, "C" location
M71	SGM01 - In-line mounting
M75	SGM02 - In-line mounting

Motor Coupling

C1	No coupling (req. for parallel mounting)
C2	0.250" Oldham
C3	0.250" Bellows (required for prec.grade)
C4	0.375" Oldham
C5	0.375" Bellows (required for prec.grade)
C6	11 mm Oldham
C7	11 mm Bellows (req. for prec.grade)
C10	14 mm Oldham (M75 motor option)
C11	14 mm Bellows (M75 motor option)
C22	9 mm Oldham
C23	9 mm Bellows
C24	5 mm Oldham (M37 NEMA 17 w/5mm shaft)
C25	5 mm Bellows (M37 NEMA 17 w/5mm shaft)
C26	8 mm Oldham (M71 motor option)
C27	8 mm Bellows (M71 motor option)
C28	0.188" Oldham (M37 NEMA 17)
C29	0.188" Bellows (M37 NEMA 17)
C30	0.250" Oldham†
C31	0.250" Bellows†
C32	0.375" Oldham†
C33	0.375" Bellows†
C39	9mm Bellows†

†Couplings for leadscrew drive

Parker Hannifin Corporation
1140 Sandy Hill Road
Irwin, PA 15642

406XR Series - How to Order

Order Example: 406 | 900 | XR | M | S | – | D3 | H4 | L8

Model Series 406

Table Travel

100 mm	100	800 mm	800
200 mm	200	900 mm	900
300 mm	300	1000 mm	1000
400 mm	400	1250 mm	1250
500 mm	500	1500 mm	1500
600 mm	600	1750 mm	1750
700 mm	700	2000 mm	2000

Table Style ..... XR

Mounting (Metric) ..... M

Grade

Precision grade (max travel 600 mm) ..... P

Standard grade (max travel 2000 mm) ..... S

Drive Screw

Drive Screw Availability

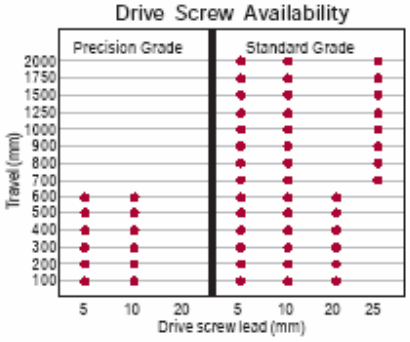

Free travel	D1
5 mm ballscrew	D2
10 mm ballscrew	D3
20 mm ballscrew	D4
25 mm ballscrew	D5

Home Sensor Assembly (one sensor)

No home sensor	H1
N.C. current sinking, flying leads	H2
N.O. current sinking, flying leads	H3
N.C. current sourcing, flying leads	H4
N.O. current sourcing, flying leads	H5
N.C. current sinking, w/locking connector	H6
N.O. current sinking, w/locking connector	H7
N.C. current sourcing, w/locking connector	H8
N.O. current sourcing, w/locking connector	H9
N.C. current sinking-sensor pack	H11
N.O. current sinking-sensor pack	H12
N.C. current sourcing-sensor pack	H13
N.O. current sourcing-sensor pack	H14

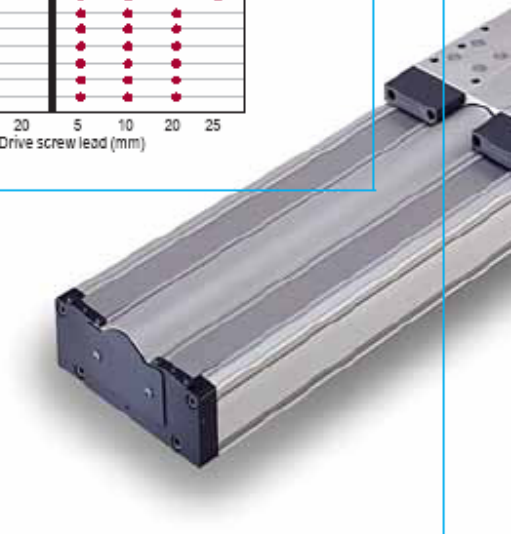

Travel Limit Sensor Assembly (two sensors)

No limit sensors	L1
N.C. current sinking, flying leads	L2
N.O. current sinking, flying leads	L3
N.C. current sourcing, flying leads	L4
N.O. current sourcing, flying leads	L5
N.C. current sinking, w/locking connector	L6
N.O. current sinking, w/locking connector	L7
N.C. current sourcing, w/locking connector	L8
N.O. current sourcing, w/locking connector	L9
N.C. current sinking-sensor pack	L11
N.O. current sinking-sensor pack	L12
N.C. current sourcing-sensor pack	L13
N.O. current sourcing-sensor pack	L14

Note: Sensors with locking connector include 5 meter extension cable.

Parker Hannifin Corporation
1140 Sandy Hill Road
Irwin, PA 15642

C7 M4 E1 B1 R1 P1



Pinning Option

P1	No multi-axis pinning
P2	X axis transfer pinning to Y or Z axis - 30 arc seconds
P3	Y axis transfer pinning to X axis - 30 arc seconds
P4	Z axis transfer pinning to X axis - 30 arc seconds
P5	X axis standard pinning to Y axis - 125 arc seconds
P6	Y axis standard pinning to X axis - 125 arc seconds

Cleanroom Preparation

R1	Class 1000 compatible (standard)
R2	Class 10 compatible (consult factory for details)

Brake Option

B1	No brake
B2	Shaft brake*

* Brake option cannot be used in conjunction with Rotary encoder option. Refer to holding torque chart (page B15) to confirm maximum load.

Encoder Option

E1	No encoder
E2	Linear encoder (tape scale) 1 micron
E3	Linear encoder (tape scale) 0.5 micron
E4	Linear encoder (tape scale) 0.1 micron
E5	Rotary shaft encoder*

Motor Mount**

M1	No motor mount
M3	NEMA 23 & SM23 - In-line mounting
M4	NEMA 34 In-line mounting
M11	SM23 - Parallel mounting, "A" location***
M12	SM23 - Parallel mounting, "B" location***
M13	SM23 - Parallel mounting, "C" location***
M14	NEMA 34 - Parallel mounting, "A" location
M15	NEMA 34 - Parallel mounting, "B" position
M16	NEMA 34 - Parallel mounting, "C" position
M17	Neometric 34 - In-line mounting
M18	Neometric 34 - Parallel mounting, "A" location
M19	Neometric 34 - Parallel mounting, "B" location
M20	Neometric 34 - Parallel mounting, "C" location
M21	Neometric 70 - In-line mounting
M22	Neometric 70 - Parallel mounting, "A" location
M23	Neometric 70 - Parallel mounting, "B" location
M24	Neometric 70 - Parallel mounting, "C" location
M29	Neometric 92 - In-line mounting
M61	BE23 - In-line mounting
M62	BE23 - Parallel mounting, "A" location
M63	BE23 - Parallel mounting, "B" location
M64	BE23 - Parallel mounting, "C" location
M75	SGM02 - In-line mounting

** See page B24 for maximum allowable motor shaft diameter.
*** SM23 motor requires long shaft option.

Motor Coupling

C1	No coupling (required for parallel mounting)
C2	0.250" Oldham
C3	0.250" Bellows (required for precision grade)
C4	0.375" Oldham
C5	0.375" Bellows (required for precision grade)
C6	11.0 mm Oldham
C7	11.0 mm Bellows (required for precision grade)
C8	0.500" Oldham
C9	0.500" Bellows (required for precision grade)
C10	14.0 mm Oldham
C11	14.0 mm Bellows (required for precision grade)

Parker Hannifin Corporation
1140 Sandy Hill Road
Irwin, PA 15642

Dimensional Drawings

404XR

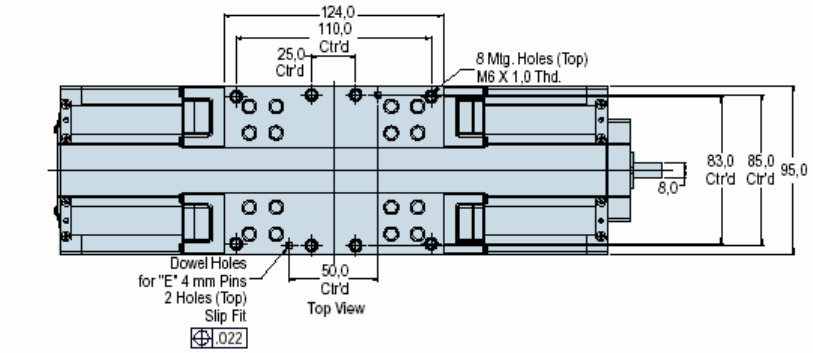

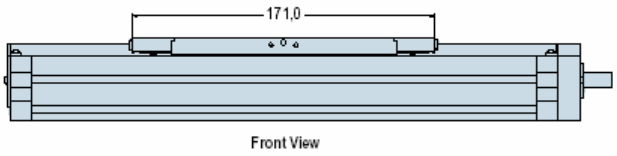

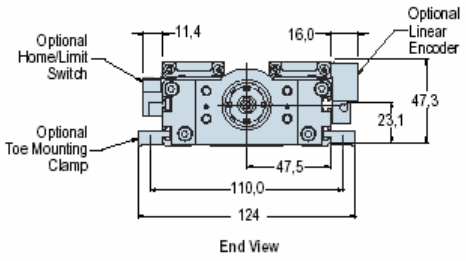

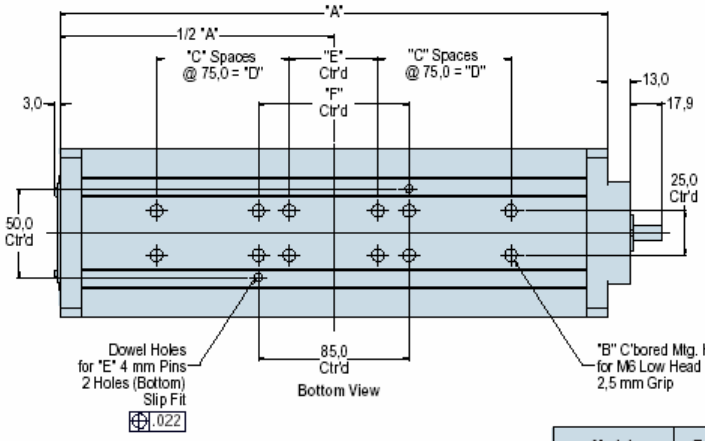

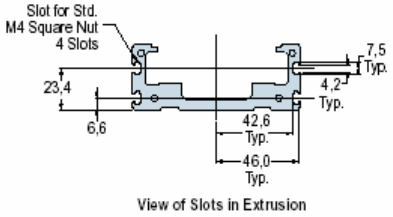

Model	Travel	A	B	C	D	E	F
404050XR	50	259	4	–	–	150,0	–
404100XR	100	309	12	1	75,0	50,0	85,0
404150XR	150	359	12	1	75,0	50,0	85,0
404200XR	200	409	12	1	75,0	50,0	85,0
404250XR	250	459	16	2	150,0	50,0	85,0
404300XR	300	509	16	2	150,0	50,0	85,0
404350XR	350	559	16	2	150,0	50,0	85,0
404400XR	400	609	20	3	225,0	50,0	85,0
404450XR	450	659	20	3	225,0	50,0	85,0
404500XR	500	709	20	3	225,0	50,0	85,0
404550XR	550	759	24	4	300,0	50,0	85,0
404600XR	600	809	24	4	300,0	50,0	85,0

Parker Hannifin Corporation
1140 Sandy Hill Road
Irwin, PA 15642

406XR

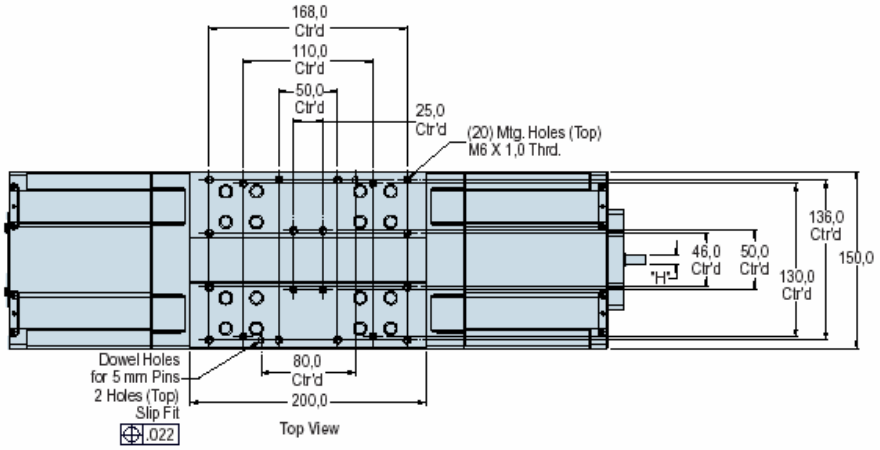

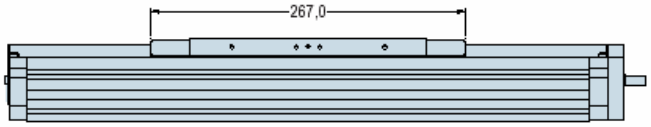

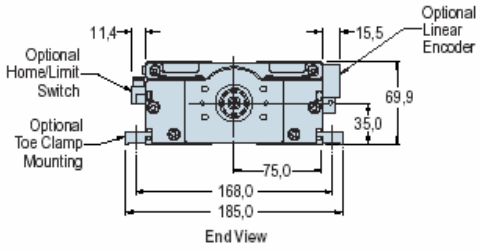

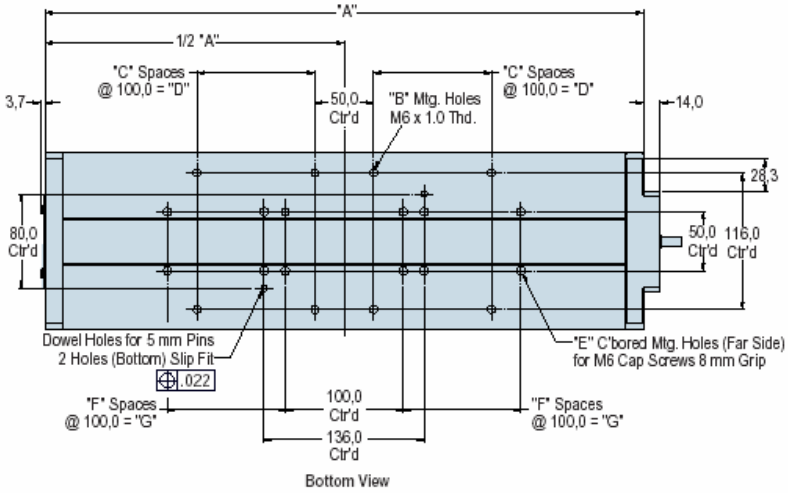

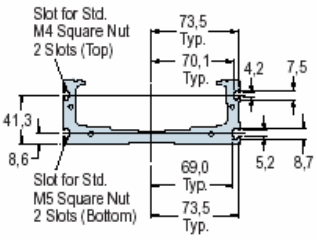

Model	Travel	Ballscrew Diameter	A	B	C	D	E	F	G	H
4060100XR	100	16	408	8	1	100,0	12	1	100,0	8,0
4060200XR	200	16	508	8	1	100,0	12	1	100,0	8,0
4060300XR	300	16	608	12	2	200,0	16	2	200,0	8,0
4060400XR	400	16	708	12	2	200,0	16	2	200,0	8,0
4060500XR	500	16	808	16	3	300,0	20	3	300,0	8,0
4060600XR	600	16	908	16	3	300,0	20	3	300,0	8,0
4060700XR	700	25	1008	20	4	400,0	24	4	400,0	10,0
4060800XR	800	25	1108	20	4	400,0	24	4	400,0	10,0
4060900XR	900	25	1208	24	5	500,0	28	5	500,0	10,0
4061000XR	1000	25	1308	24	5	500,0	28	5	500,0	10,0
4061250XR	1250	25	1558	32	7	700,0	32	6	600,0	10,0
4061500XR	1500	25	1808	36	8	800,0	40	8	800,0	10,0
4061750XR	1750	25	2058	40	9	900,0	44	9	900,0	10,0
4062000XR	2000	25	2308	44	10	1000,0	48	10	1000,0	10,0

Parker Hannifin Corporation
1140 Sandy Hill Road
Irwin, PA 15642

General Table Specifications

	404XR		406XR	
Common Characteristics	**Precision**	**Standard**	**Precision**	**Standard**
Performance				
Bidirectial Repeatability (μm)	+/-1.3	+/-3.0	+/-1.3	+/-3.0
Duty Cycle	100%	100%	100%	100%
Max Acceleration – m/sec^2 (in/sec^2)	20 (773)	20 (773)	20 (773)	20 (773)
Rated Capacity				
Normal load – kgf (lbs)	170 (375)	170 (375)	630 (1390)	630 (1390)
Axial load – kgf (lbs) Ballscrew	90 (198)	90 (198)	90 (198)	90 (198)
Leadscrew	n/a	25 (55)		
Motor Sizing				
Drive Screw Efficiency Ballscrew	90%	90%	90%	80%
Leadscrew	30%	30%		
Max Break-Away Torque – Nm (in-oz)				
0 to 600 mm Travel	0.13 (18)	0.18 (26)	0.13 (18)	0.18 (26)
600 to 2000 mm Travel	na	na	na	0.39 (55)
Max Running Torque – Nm (in-oz)				
0 to 600 mm Travel	0.11 (16)	0.17 (24)	0.11 (16)	0.17 (24)
600 to 2000 mm Travel	na	na	na	0.34 (48)
Linear Bearing – Coefficient of Friction	0.01	0.01	0.01	0.01
Ballscrew Diameter (mm)	16	16	Refer to chart on page 13	
Carriage Weight – kg (lbs)	0.70 (1.55)	0.70 (1.55)	2.7 (5.94)	2.7 (5.94)

404XR Travel (mm)	Positional [2] Accuracy (μm)		Straightness & Flatness Accuracy (μm) Prec./Std.	Input Inertia 10^{-5} kg-m^2			Max Screw Speed (Revs Per Second) Prec./Std.	Total Table Weight (kg) Prec./Std.
	Prec.	Std.		5 mm	10 mm	20 mm		
50	8	12	6	1.68	1.81	2.34	60	2.8
100	8	12	6	1.93	2.07	2.60	60	3.0
150	10	14	9	2.19	2.32	2.85	60	3.3
200	12	20	10	2.44	2.57	3.11	60	3.6
250	12	22	12	2.69	2.83	3.36	60	3.9
300	14	24	13	2.95	3.08	3.61	60	4.2
350	14	26	15	3.20	3.33	3.87	60	4.5
400	16	26	16	3.46	3.59	4.12	60	4.8
450	19	28	18	3.71	3.84	4.37	60	5.1
500	21	34	19	3.96	4.10	4.63	60	5.4
550	23	36	21	4.22	4.35	4.88	60	5.7
600	25	40	22	4.47	4.60	5.14	54	6.0

406XR Travel (mm)	Positional [2] Accuracy (μm)		Straightness & Flatness Accuracy (μm) Prec./Std.	Input Inertia 10^{-5} kg-m^2				Max Screw Speed (Revs Per Second) Prec./Std.	Total Table Weight (kg) Prec./Std.
	Prec.	Std.		5 mm	10 mm	20 mm	25 mm		
100	8	12	6	3.34	3.85	5.90	-	60	8.7
200	12	20	10	3.92	4.43	6.48	-	60	10.0
300	14	24	13	4.50	5.01	7.06	-	60	11.3
400	16	26	16	5.08	5.59	7.64	-	60	12.6
500	21	34	19	5.65	6.17	8.22	-	55	13.9
600	25	40	22	6.23	6.75	8.80	-	44	15.2
700	-	92	25	36.51	37.02	-	40.61	47	19.2
800	-	94	29	39.96	40.47	-	44.07	47	20.7
900	-	103	32	43.41	43.93	-	47.52	47	22.2
1000	-	105	35	46.87	47.38	-	50.97	47	23.7
1250	-	118	42	55.50	56.01	-	59.61	35	27.6
1500	-	134	50	64.14	64.65	-	68.24	26	31.4
1750	-	154	57	72.77	73.28	-	76.88	20	35.2
2000	-	159	65	81.40	81.92	-	85.51	16	39.1

[2] Positional accuracy applies to in-line motor configurations only. Contact factory for parallel motor specifications.

Parker Hannifin Corporation
1140 Sandy Hill Road
Irwin, PA 15642

404/406XR Series Engineering Reference

The following performance information is provided as a supplement to the product specifications pages. The following graphs and formulas are used to establish the table life relative to the applied loads. The useful life of a linear table at full catalog specifications is dependent on the forces acting upon it. These forces include both static components resulting from payload weight, and dynamic components due to acceleration/deceleration of the load. in multi-axes applications, the primary positioner at the bottom of the stack usually establishes the load limits for the combined axes. When determining life/load, it is critical to include the weight of all positioning elements that contribute to the load supported by the primary axis.

Table Life/Load Chart

Compression (normal load)

This graph provides a "rough cut" evaluation of the support bearing life/load characteristics. The curves show the life/load relationship when the applied load is centered on the carriage, normal (perpendicular) to the carriage mounting surface. For final evaluation of life vs. load, including off center, tension, and side loads refer to the charts and formulas found on our web site www.parkermotion.com.

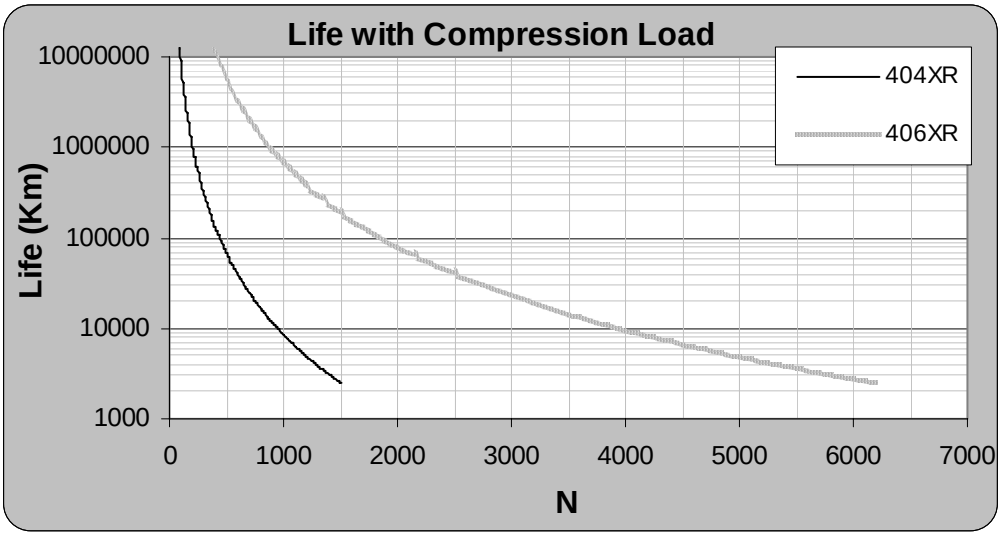

Table Life/Load Chart

Thrust (axial load)

This graph illustrates table ballscrew life relative to the axial load.

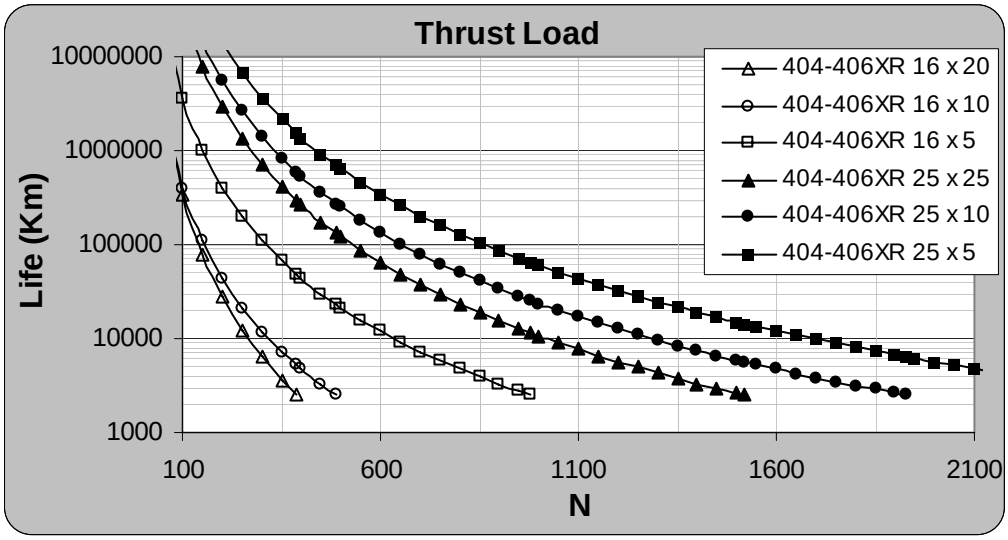

Parker Hannifin Corporation
1140 Sandy Hill Road
Irwin, PA 15642

These charts are to be used in conjunction with the corresponding formulas found under Product Information at www.parkermotion.com to establish the life / load for each bearing (4 per table).

Several dimensions, which are specific to each linear positioning table model, and the load geometry are required for these computations. These dimensions are supplied in the catalog information for each positioner. The dimensions are referenced as follows:

- d1 – bearing block center-to-center longitudinal spacing
- d2 – bearing rail center-to-center lateral spacing
- da – rail center-to-carriage mounting surface

	d1	d2	da
404XR	80	50	28
406XR	114	90.3	42.5

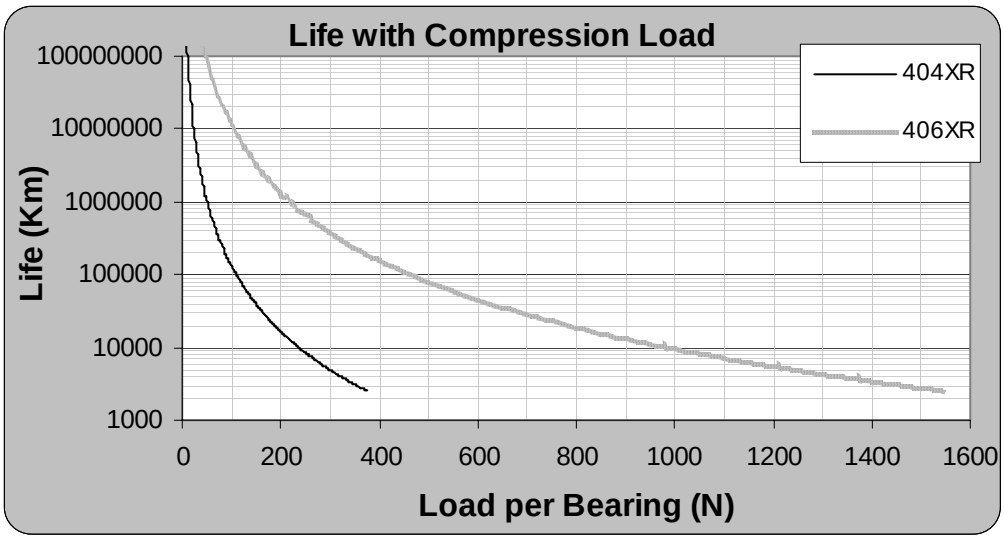

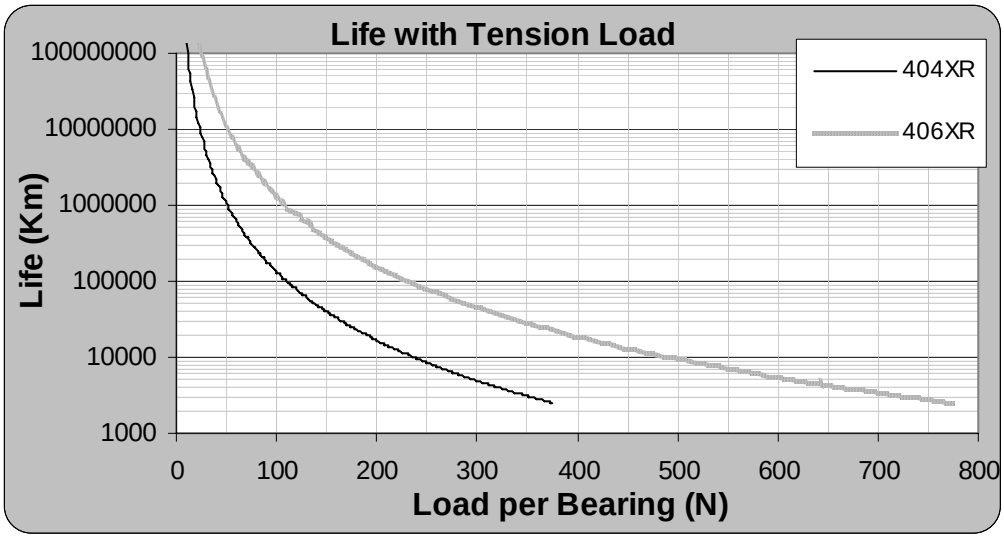

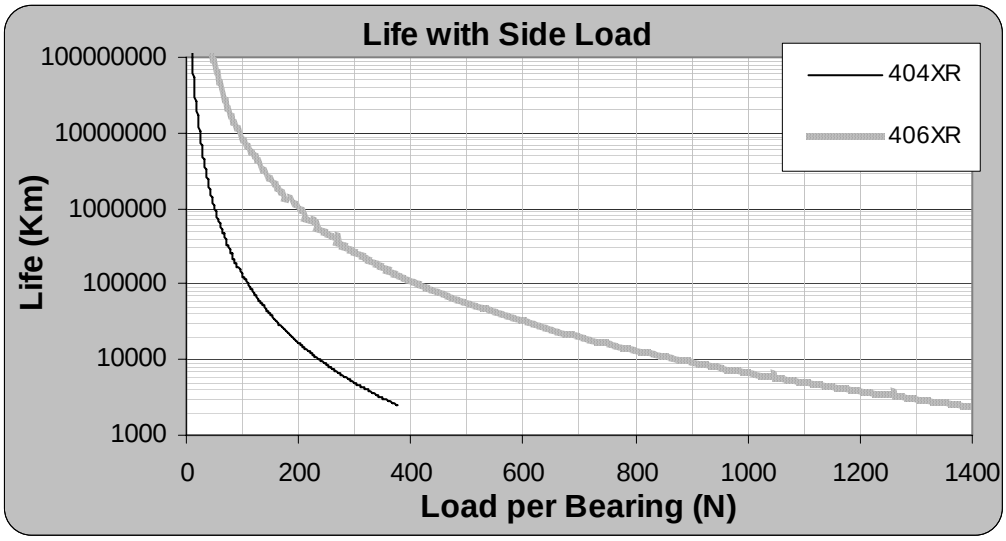

Parker Hannifin Corporation
1140 Sandy Hill Road
Irwin, PA 15642

Horizontal Translation — Normal Load

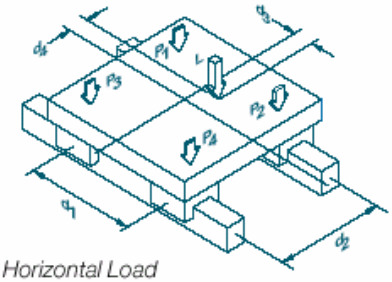

Figure 1: Horizontal Load

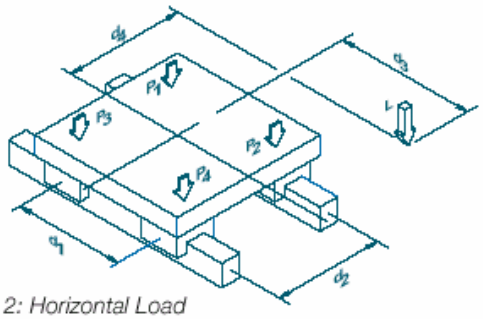

Figure 2: Horizontal Load

$$P_1 = \left[\frac{L}{4}\right] - \left[\frac{L}{2} * \frac{d_3}{d_1}\right] + \left[\frac{L}{2} * \frac{d_4}{d_2}\right]$$

$$P_2 = \left[\frac{L}{4}\right] + \left[\frac{L}{2} * \frac{d_3}{d_1}\right] + \left[\frac{L}{2} * \frac{d_4}{d_2}\right]$$

$$P_3 = \left[\frac{L}{4}\right] - \left[\frac{L}{2} * \frac{d_3}{d_1}\right] - \left[\frac{L}{2} * \frac{d_4}{d_2}\right]$$

$$P_4 = \left[\frac{L}{4}\right] + \left[\frac{L}{2} * \frac{d_3}{d_1}\right] - \left[\frac{L}{2} * \frac{d_4}{d_2}\right]$$

Figure 1 shows a normal load applied to the carriage translating horizontally. The vector L, defined by the CG of the load, is shown applied at a point whose coordinate distances from the center of the carriage are given by distances d3 and d4.

With the positioner at rest or moving with uniform velocity, the loads on each of the four bearing blocks are given by the above equations:

Note that each of the four bearing blocks will experience either compressional or tensional loading; the magnitude of these forces at each bearing is dependent upon the location of the load vector with respect to the center of the positioner carriage. For each bearing, the maximum of the forces in tension and compression is plotted on the load charts for the specific model positioner to determine the life of the table in the application.

The calculations for loads whose CG falls outside the carriage mounting surface area, as shown in Figure 2, are identical to those used with Figure 1. In either case, accelerations and decelerations of the load must be considered in calculating the dynamic forces which determine the life of the system in a particular application.

Horizontal Translation — Side Load

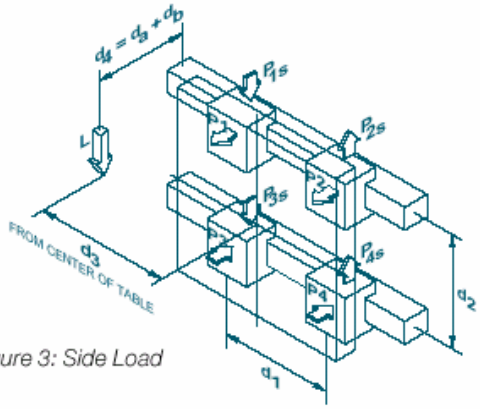

Figure 3: Side Load

$$P_1 = P_2 = \frac{L}{2}\left[\frac{d_4}{d_2}\right]$$

$$P_3 = P_4 = -\frac{L}{2}\left[\frac{d_4}{d_2}\right]$$

$$P_{1s} = P_{3s} = \frac{L}{4} + \left[\frac{L}{2} * \frac{d_3}{d_1}\right]$$

$$P_{2s} = P_{4s} = \frac{L}{4} - \left[\frac{L}{2} * \frac{d_3}{d_1}\right]$$

The previous loading scenarios have involved only normal forces (compressional or tensional) on the bearings. Consider a positioner as shown in Figure 3, which involves a lateral (side) load applied to the carriage which translates horizontally. The load vector (L) is shown applied at a point whose coordinate distances from the center of the carriage bearing system are given by dimensions d3 and d4. Note that d4 is the sum of distance da—the distance between bearing and center and carriage surface which is provided for each linear positioner—plus db, the distance of the load CG from the mounting surface of the carriage.

The loading felt by each of the four bearing blocks when the positioner is stationary or moving with uniform velocity is given by the above equations:

Here P1, P2, P3 and P4 are the normal loads (tensional and compressional) and P1S, P2S, P3S and P4S are the side loads. For each bearing, the largest side loads and normal loads in both tension and compression are identified for calculating the positioner life in the application.

For round rail/ball bushing type bearings, the forces are plotted individually on the appropriate curves to determine the service life.

For linear motion guide bearing positioners, an "equivalent load per bearing" is calculated for the life determination. Equations listed in Table A, page 22, apply for the Daedal positioners which incorporate linear motion guide bearings. As shown in Table A, this "equivalent load" is plotted on the indicated load/life graph to determine the positioner's service life.

Again, accelerations and decelerations of the load must be considered in calculating the dynamic forces which determine the life of the system in a particular application.

Parker Hannifin Corporation
1140 Sandy Hill Road
Irwin, PA 15642

Vertical Translation

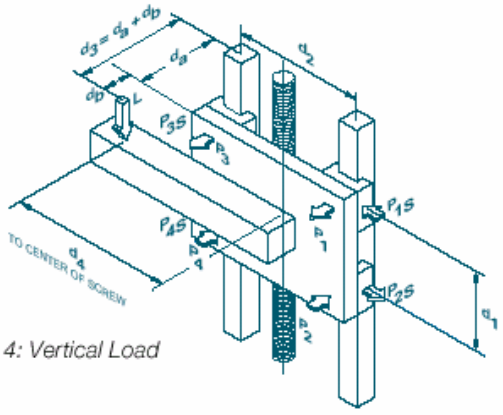

Figure 4: Vertical Load

$$P_1 = P_3 = \frac{L}{2}\left[\frac{d_3}{d_1}\right]$$

$$P_2 = P_4 = -\frac{L}{2}\left[\frac{d_3}{d_1}\right]$$

$$P_{1s} = P_{3s} = \frac{L}{2}\left[\frac{d_4}{d_2}\right]$$

$$P_{2s} = P_{4s} = -\frac{L}{2}\left[\frac{d_4}{d_2}\right]$$

Figure 4 shows a load applied to the positioner carriage which translates vertically. The load vector (L) is shown applied at a point whose coordinate distances from the center of the carriage bearing system are given by distances d3 and d4. Note that here d3 is the sum of distance da, which is given for the particular linear positioner plus db, the distance of the load CG from the mounting surface of the carriage. d4 is the horizontal distance of the load vector (L) from the carriage centerline.

The loading felt by each of the four bearing blocks when the positioner is stationary or moving with uniform velocity is given by the above equations:

P1 through P4 and P1S through P4S are respectively the normal and side loads on each bearing block. For each bearing, the largest side loads and normal loads in both tension and compression are determined and, for linear motion guides, "equivalent loads" are computed from the equations in Table A (below) following the same procedure described in the preceding section for *Horizontal Translation with Side Load* to calculate the positioner life in the applications.

Once more, accelerations and decelerations of the load must be considered in calculating the dynamic forces which determine the life of the system in a particular application.

Table A - **Linear Motion Guide Bearing Load/Life Computation**

Positioner	Loads	Compute*	Evaluate Life On
400XR	Side & tension Ps > Pt	Pe = (0.5 * Pt) + Ps	Side load chart
	Side & tension Ps ≤ Pt	Pe = (0.5 * Ps) + Pt	Tension chart
	Side & compression Ps > Pc	Pe = (0.5 * Pc) + Ps	Side load chart
	Side & compression Ps ≤ Pc	Pe = (0.5 * Ps) + Pc	Compression chart

Example Computations

Example 1

Horizontal Translation with Side Loads, 404XR Positioner

L = 20 Kgf
50 mm from carriage surface;
130 mm from carriage center.

Figure 3 (page 21) shows this configuration with dimensions given here.

d1 = 80 mm
db = 50 mm
d2 = 50 mm
d3 = 130 mm
da = 28 mm
d4 = da + db = 78 mm

The normal and side force components on each bearing block are computed from the equations as shown:

$$P_1 = P_2 = \frac{L}{2}\left[\frac{d_4}{d_2}\right] = 15.7 \text{ (tension) Kgf}$$

$$P_3 = P_4 = -\frac{L}{2}\left[\frac{d_4}{d_2}\right] = -15.7 \text{ (compression) Kgf}$$

$$P_{1s} = P_{3s} = \frac{L}{4} + \left[\frac{L}{2} * \frac{d_3}{d_1}\right] = 21.3 \text{ Kgf}$$

$$P_{2s} = P_{4s} = \frac{L}{4} - \left[\frac{L}{2} * \frac{d_3}{d_1}\right] = -11.3 \text{ Kgf}$$

Life for each bearing needs to be evaluated independently. For bearings with a side load, refer to the combined equivalent loading factors (Table A).

Example:

Bearing 1 has P1=15.7Kgf tension and P1s=21.3Kgf side load

P1s>Pt⇒Pe=(0.5Pt+Ps)=29.1Kgf

Refer to side load chart (page 20)

Life @ 29.1Kgf-50,000km

Parker Hannifin Corporation
1140 Sandy Hill Road
Irwin, PA 15642

Chapter 3 - Component Specifications

Linear Encoders

Description	Specification
Input Power	5 VDC +/- 5% 150mA
Output (incremental)	Square wave differential line driver (EIA RS422) 2 channels A and B in quadrature (90) phase shift
Reference (Z channel) – see Section 2.312 for additional information	Synchronized pulse, duration equal to one resolution bit. Repeatability of position is unidirectional moving toward non-motor end.
Positional Accuracy	+/- 3 microns after linear slope correction
Maximum Speed – see Chapter 2 for additional information	1.0 micron resolution = 3.0 meters/sec 0.5 micron resolution = 1.5 meters/sec 0.1 micron resolution = 0.3 meters/sec

Z-Channel Position Reference

The Z channel is an output on the encoder. Many Servo Controllers support this input. The Z channel on the 404XR is located at Mid Travel. The Z channel is a unidirectional device. This means that the final homing direction must occur in one direction. The 404XR is set that the final home direction is to be toward the non-motor end of the table. The repeatability of the Z channel is equal to +/- 2 resolution counts of the encoder (except for 0.1 micron scales which have a repeatability of +/-1 microns). Thus the repeatability of the "Z" channel equals:

Encoder Resolution	Z Channel Repeatability
1 micron	+/- 2 micron
0.5 micron	+/- 1 micron
0.1 micron	+/- 1 micron

NOTE: Home Repeatability is also very dependent on Controller input speed and Homing algorithms. The above repeatability does not include possible controller tolerance. Additionally, to achieve the highest repeatability the final homing speed must be slow. Slower final speed usually results in higher repeatability.

NOTE: The "Z" channel output is only one resolution count wide. Thus the *on-time* may be very brief. Due to this some controllers may have difficulty reading the signal. If you are experiencing the positioner not finding the "Z" channel during homing, try reducing final homing speed; also refer to your controller manual for frequency rates of the "Z" channel input.

Parker Hannifin Corporation
1140 Sandy Hill Road
Irwin, PA 15642

Linear Encoder Speed Limit

The linear encoder has speed limits relative to encoder resolution; these limits are listed below:

Encoder Resolution	Maximum Velocity (2)	Required Post Quadrature Input Bandwidth (1)
1 micron	3 meters/second	6.7 Mhz
0.5 micron	1.5 meters/second	6.7 Mhz
0.1 micron	0.3 meters/second	10 Mhz

(1) This is the bandwidth frequency that the amplifier or servo control input should have to operate properly with the encoder output at maximum speeds. This frequency is post-quadrature, to determine pre-quadrature divide above values by 4. Above frequencies include a safety factor for encoder tolerances and line loses.

(2) Maximum encoder speed may exceed maximum speed of positioner – See Section 2.51, General Table Specifications, for maximum screw speed.

Linear Encoder Wiring Diagram

Termination: Flying Leads

Function	Signal Name	Wire Color
Power	+5V	Brown
	0V	White
Incremental Signal	A+	Green
	A-	Yellow
	B+	Blue
	B-	Red
Reference	Z+	Pink
	Z-	Grey
Inner Shield	Inner Shield	Bare (Connect to White Lead - 0V Ground)
Outer Shield	Outer Shield	Bare (Connect to Earth Ground)

Parker Hannifin Corporation
1140 Sandy Hill Road
Irwin, PA 15642

Rotary Encoders

Description	Specification
Encoder Type	Modular Rotary Encoder
Input Power	5VDC, 135mA
Output	A/B quadrature and reference mark, differential line drive output
Resolution	1250 lines/rev; 5000 counts post quadrature (1 micron resolution when using a 5mm lead ballscrew)
Accuracy	+/- 2 arc minutes
Temperature Range	Operation (-10°C to +85°C). Storage (-30°C to +110°C)
Cable length/Cable material	0.47 meters --- Material: PVC (std.)

Rotary Encoder Wiring Diagram

Termination: 'in-line' connector

Pin Number	Function	Wire Color
1	+VCC	Red
2	Ground	Black
3	CH A	White
4	CH A NOT	Yellow
5	CH B	Green
6	CH B NOT	Blue
7	Index	Orange
8	Index NOT	Brown
	Shield	Drain

Brakes

	404XR	406XR
Brake Type	Electromagnetic	Electromagnetic
Input Power	24VDC, 0.46A	24VDC, 0.5A
Holding Torque	2.0 N-m	4.5 N-m
Output	100mA (max)	100mA (max)
Wire Color Code	(+) supply Brown (-) supply Blue	(+) supply Brown (-) supply Blue
Temperature Range	Operation (-40^0 F to $+180^0$ F)	Operation (-40^0 F to $+180^0$ F)

Parker Hannifin Corporation
1140 Sandy Hill Road
Irwin, PA 15642

Limit & Home Sensors

Switch Type	Proximity			
Input Power	5-30VDC, 20mA			
Output	100mA (max)			
Repeatability	+/- 10 microns (unidirectional)			
Wire Color Code	3 Wire Sensor		4 Wire Sensor	
	(+) Supply	Brown	(+) Supply	Brown
	Output	Black	(N.O.) Normally Open Output	Black
	(-) Supply	Blue	(N.C.) Normally Closed Output	White
			(-) Supply	Blue
Cable Length	Refer to ordering information in Appendix B			
LED Color	Yellow			
Switch Location	To provide full catalog travel, switch targets are to be positioned 89 mm (404XR) or 135 mm (406XR) from outside edge of end blocks. See Limit/Home Mounting Procedure in Chapter 5.			
Sensor Pack Switch Location	The L11-L14, H11-H14 Limit/Home Options are enclosed in a sensor pack that is bolted to the side of the table. These sensors are adjustable along the length of the sensor pack. (Wire terminates in a 5-pin connector; extension cable included).			
N.O./N.C. Options	Normally Open (N.O.) switches are typically used as home sensors and are typically located between the limit sensors. Normally Closed (N.C.) switches are generally used as defense circuits to prevent damage to components caused by over-travel.			
Sinking/Sourcing Options	Sinking Switches (a.k.a. NPN): The output lead of this switch provides an electrical path to ground when activated. Sourcing Switches (a.k.a. PNP): The output lead of this switch provides a positive (+) voltage potential relative to ground. Note: refer to the controller's manual for input compatibility.			
Temperature Range	-14° F to +158° F			
Vacuum Rating	1×10^{-3} Torr			

CAUTION: REVERSING SUPPLY
POTENTIAL WILL DESTROY SENSOR
Brown: +5 to +30VDC Supply
Blue: Ground Supply

Sensor Pack Cable Wiring Diagram

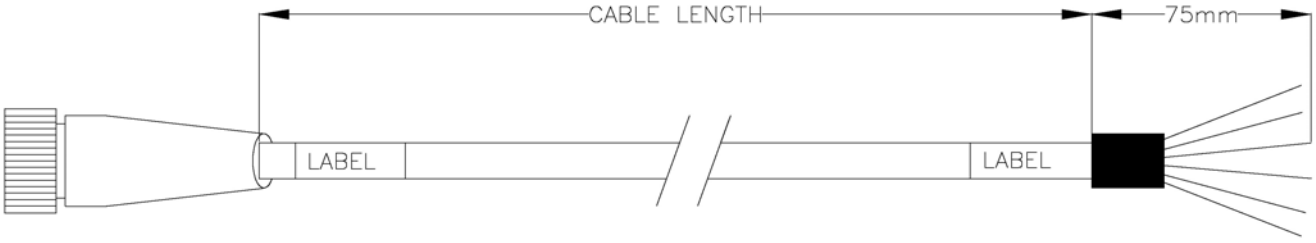

DAEDAL PART NO.	CABLE LENGTH
006-1742-01	3 METERS
006-1742-02	7.5 METERS

WIRE COLOR	FUNCTION	PIN #
RED	+5 to +24V DC	A
BLUE	LIMIT 1 (LXR -)	B
ORANGE	LIMIT 2 (LXR +)	C
GREEN	HOME	D
BLACK	GROUND	E
GREEN w/ YELLOW STRIPE	SHIELD	Shield Case

NOTE: Limit 2 is the limit switch on the connector end of the sensor pack housing.

Parker Hannifin Corporation
1140 Sandy Hill Road
Irwin, PA 15642

Couplings

Coupling Grade (Style): ***Standard Grade*** *(Oldham)*

Catalog Coupling Code	Bore Diameter (Motor Side)	Outside Diameter (mm)	Length (mm)	Rated Torque (Nm)	Torsional Windup (Nm/Rad)	Misalignment Specifications		
						Lateral (mm)	Axial (mm)	Angular
C2	6.3mm (0.250")	25	32.5	3.39	204	+/- 0.203	+/- 0.102	+/- 0.5°
C4 406XR w/M3 Motor Blk travel ≤ 700mm	9.5mm (0.375")	41	50.8	18	1200	+/- 0.254	+/- 0.152	+/- 0.5°
C4 404XR; 406XR w/M3 Motor Blk travel ≥ 700mm	9.5mm (0.375")	25	32.5	3.39	204	+/- 0.203	+/- 0.102	+/- 0.5°
C4 406XR w/M4 or M17 Motor Blk	9.5mm (0.375")	41	50.8	18	1200	+/- 0.254	+/- 0.152	+/- 0.5°
C6 404XR	11.0mm (0.43")	33	48	9	615	+/- 0.203	+/- 0.152	+/- 0.5°
C6 406XR	11.0mm (0.43")	41	50.8	18	1200	+/- 0.254	+/- 0.152	+/- 0.5°
C8	12.7mm (0.50")	41	50.8	18	1200	+/- 0.254	+/- 0.152	+/- 0.5°
C10	14.0mm (0.55")	41	50.8	18	1200	+/- 0.254	+/- 0.152	+/- 0.5°

Coupling Grade (Style): ***Precision Grade*** *(Bellows)*

Catalog Coupling Code	Bore Diameter (Motor Side)	Outside Diameter (mm)	Length (mm)	Rated Torque (Nm)	Torsional Windup (Nm/Rad)	Misalignment Specifications		
						Lateral (mm)	Axial (mm)	Angular
C3	6.3mm (0.250")	20	26	1.5	748	+/- 0.1	+/- 0.25	+/- 1.2°
C5 404XR; 406XR w/M3 Motor Blk	9.5mm (0.375")	25	32	2.0	1530	+/- 0.1	+/- 0.25	+/- 1.2°
C5 406XR w/M4 or M17 Motor Blk	9.5mm (0.375")	32.5	41.5	4.5	6450	+/- 0.1	+/- 0.25	+/- 1.2°
C7	11.0mm (0.43")	32.5	41.5	4.5	6450	+/- 0.1	+/- 0.25	+/- 1.2°
C9	12.7mm (0.50")	32.5	41.5	4.5	6450	+/- 0.1	+/- 0.25	+/- 1.2°
C11	14.0mm (0.55")	32.5	41.5	4.5	6450	+/- 0.1	+/- 0.25	+/- 1.2°

Output Shaft Diameter: For positioners with travel of 600 mm or less the positioner's output shaft is 8 mm; for positioners with travel of 700 mm or greater the positioner's output shaft is 10 mm.

Replacement Couplings: See spare parts list for part numbers to be used to purchase replacement couplings.

Parker Hannifin Corporation
1140 Sandy Hill Road
Irwin, PA 15642

Chapter 4 - Base Mounting Procedures

Mounting Surface Requirements

Proper mounting of the 404XR is *essential* to optimize product performance. All specifications are based on the following conditions:

- The positioner must be bolted down along its entire length.
- The positioner must be mounted to a flat, stable surface with a flatness error less than or equal to 0.013mm/300mm.
    - Catalog Specifications may deviate for positioners mounted to surfaces that do not meet the above conditions.
    - If the surface does not met these specifications the surface can be shimmed to comply with these requirements.
- If mounting conditions require that the table base is *overhung*, table specifications will not be met over that portion of the table. Additionally, in *X-Y Systems* the *overhung* portion of the Y-axis may not met specifications due to the additional error caused by deflection and non-support of the base. Contact Parker Hannifin Corporation for guidelines on specifications of overhang applications.

Base Mounting Methods

The 404/406XR Series can be mounted in one of two ways:

Base thru holes

The 404/406XR tables have M6 counter bored holes in the base of the unit. See dimensional drawings for hole location.

To access the base mounting holes, remove the center cover.

- Locate and remove bearing cover plate (opposite motor end) by removing (2) button head screws.
- Note: If a brake or rotary encoder is employed the cover plate will not be present. Remove brake or encoder according to appropriate mounting procedure.
- Remove top cover by removing the (4) button head screws that are going through the corners of the cover. These screws are also used to hold down the strip seal mounting plate.
- Note: The strip seals do not need to be removed.
- Slide the cover off from underneath the strip seals. The cover can only slide in the direction away from the motor.
- FOR THE 404XR ONLY: The base mounting holes are counter bored for M6 Low Head Cap Screws. It is very important that LOW Head screws are used to allow clearance for the moving carriage.

Parker Hannifin Corporation
1140 Sandy Hill Road
Irwin, PA 15642

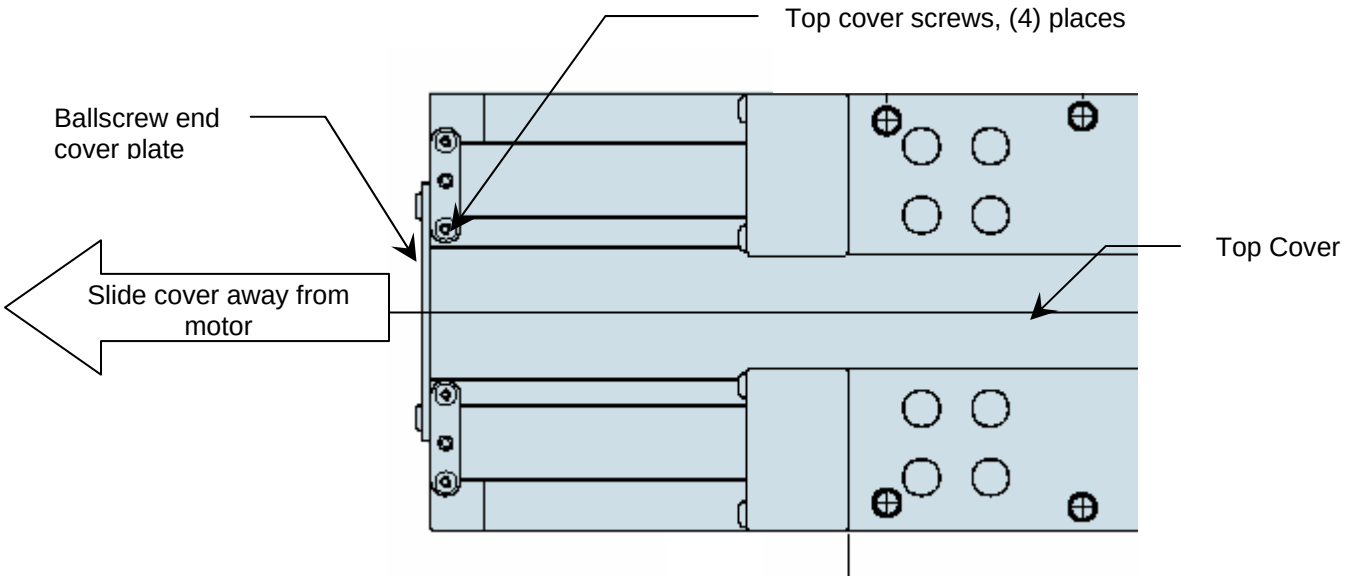

Toe clamp mounting

Tools Required: Allen Key M5

- The 404/406XR series can be mounted utilizing optional toe clamps.
- For 50mm travel positioners use (4) Toe Clamps.
- Add (2) clamps for each additional 150mm travel.
- Mount Toe Clamps onto work surface using counter-bored holes provided. M6 (4) Low Head Cap Screw (404XR) or Socket Head Cap Screw (406XR) can be used to mount to customer mounting surface.

Riser Blocks

Tools Required: Allen Key M5, M2.5, M2

Most of the motors used with the 404/406XR series have a taller profile than the positioner. Thus the unit cannot be mounted with the motor and table in the same plane. Riser blocks can be provided to space the table above a mounting surface.

- Locate sufficient amount of Riser Blocks for the required length of travel.
- Lay out Riser Blocks such that the entire length of the positioner is supported.
- Access interior of the positioner. See Internal Access Procedure Chapter 6.
- Mount Riser Blocks to the positioner using M6 X 20 screws provided.
- Mount positioner to the work surface using counter-bored holes in the riser blocks.
- Reassemble positioner.

Parker Hannifin Corporation
1140 Sandy Hill Road
Irwin, PA 15642

Chapter 5 - Component Mounting Procedures

Center Drive Motor Mounting

Tools Required: Allen Key, Phillips Head

- Slip coupling over drive shaft and tighten the screw on the drive shaft side of the coupling. **Note: Do not use Loctite on coupling screws.**
- Slide motor into motor adapter plate and into coupling. Select the appropriate hardware and tighten all bolts.
- Tighten the coupling screw on the motor shaft side. Turn motor by the rear shaft to make sure carriage moves. Then hold carriage and rotate motor again by the rear shaft to make sure coupling won't slip. If the motor does not have a rear shaft be certain that the coupling screws are tight. **Note: Do not use Loctite on coupling screws.**

Parallel Motor Mounting

Tools Required: Allen Key M2, M2.5, M3, M4, M5 and Depth Micrometer

Purpose: Parallel Motor Mounting is employed whenever a shorter overall unit is needed. The motor is positioned along the sides or bottom of the table (designated by position A, B, or C). See Figure 1.

- Locate 404/406XR series linear positioner motor mount. Determine correct motor mount required. If necessary, remove any motor, coupling, adapter plate, and coupling housing.
- Identify the correct parallel mounting position, which is desired (Position A, B, or C).

Position A Position C Position B

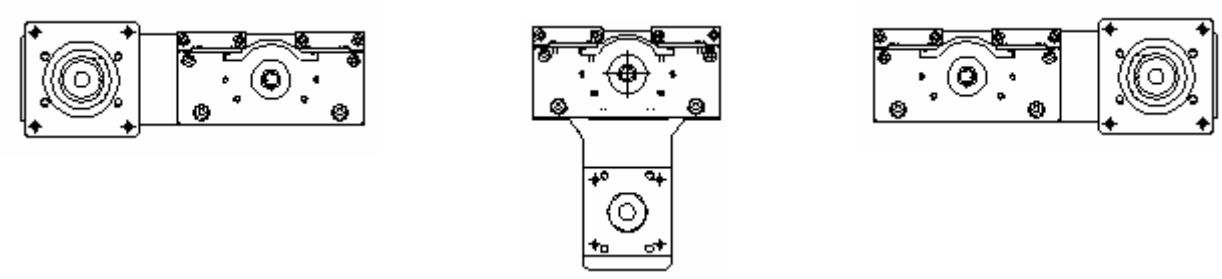

Parker Hannifin Corporation
1140 Sandy Hill Road
Irwin, PA 15642

- Locate correct parallel mounting hardware for *side* positions ‘A’ and ‘B’:

Item #	404XR	406XR
128 129	(2) Pulley	(2) Pulley
132	(1) Belt	(1) Belt
	(1) Shroud	(1) Shroud
126	(1) Cover Plate	(1) Cover Plate
515	(4) M4 x 8 Button Head Screws	(4) M5 x 10 Socket Head Cap Screws
541	(4) M4 Ribbed Spring Washers	(4) M5 Spring Washers
540	(2) M5 x 18 Socket Head Cap Screws	(4) M6 x 16 Socket Head Cap Screws
517	(2) M5 x 10 Button Head Screws	
539	(4) M3 x 8 Button Head Screws	(4) M4 x 10 Button Head Screws

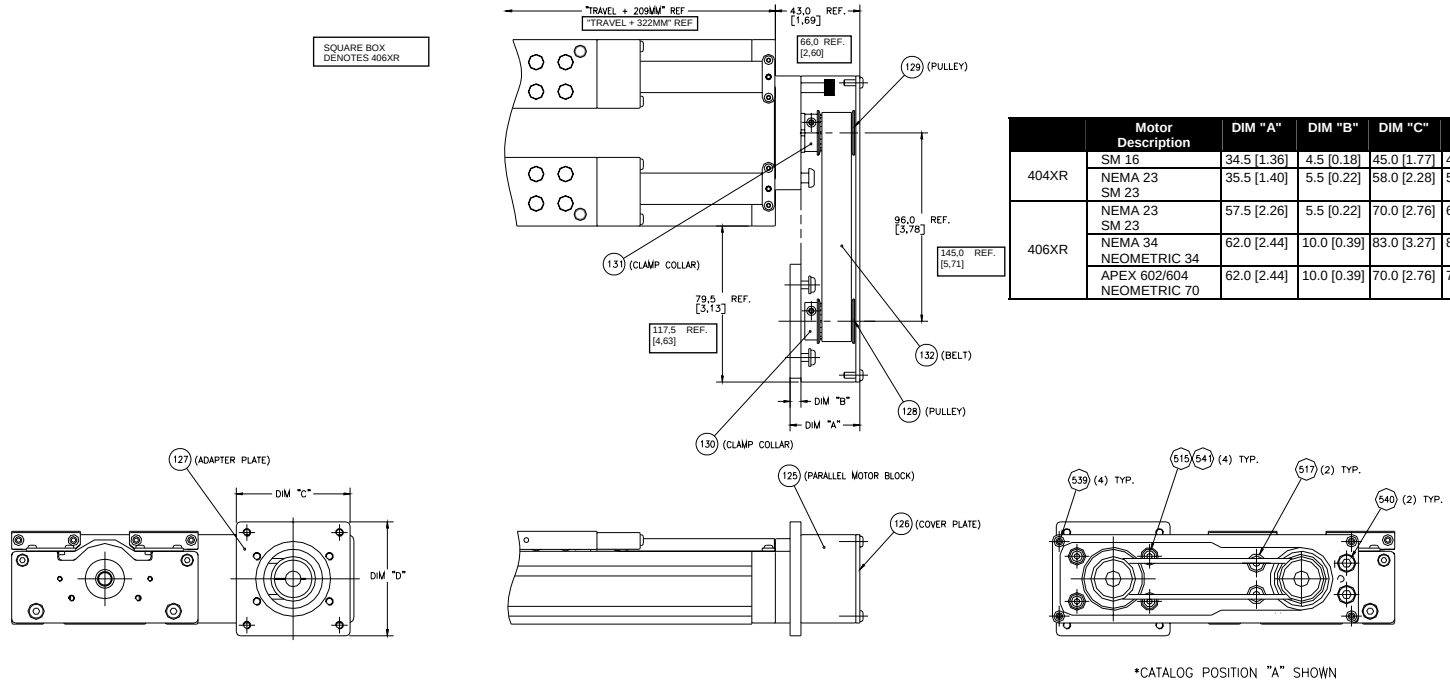

	Motor Description	DIM "A"	DIM "B"	DIM "C"	DIM "D"
404XR	SM 16	34.5 [1.36]	4.5 [0.18]	45.0 [1.77]	45.0 [1.77]
	NEMA 23 SM 23	35.5 [1.40]	5.5 [0.22]	58.0 [2.28]	58.0 [2.28]
406XR	NEMA 23 SM 23	57.5 [2.26]	5.5 [0.22]	70.0 [2.76]	65.0 [2.56]
	NEMA 34 NEOMETRIC 34	62.0 [2.44]	10.0 [0.39]	83.0 [3.27]	83.0 [3.27]
	APEX 602/604 NEOMETRIC 70	62.0 [2.44]	10.0 [0.39]	70.0 [2.76]	70.0 [2.76]

Parker Hannifin Corporation
1140 Sandy Hill Road
Irwin, PA 15642

- Locate correct parallel mounting hardware for *bottom* position 'C':

Item #	404XR	406XR
128 129	(2) Pulley	(2) Pulley
132	(1) Belt	(1) Belt
	(1) Shroud	(1) Shroud
126	(1) Cover Plate	(1) Cover Plate
515	(4) M4 x 8 Button Head Screws	(4) M5 x 10 Socket Head Cap Screws
541	(4) M4 Ribbed Spring Washers	(4) M5 Spring Washers
540	(4) M5 x 18 Socket Head Cap Screws	(4) M6 x 16 Socket Head Cap Screws
539	(4) M3 x 8 Button Head Screws	(4) M4 x 10 Button Head Screws

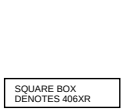

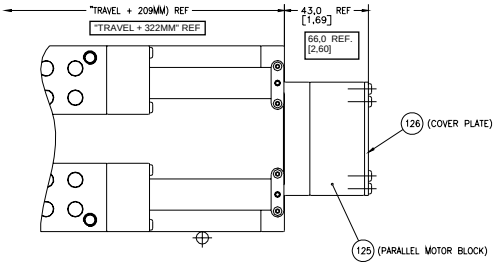

	Motor Description	DIM "A"	DIM "B"	DIM "C"	DIM "D"
404XR	SM 16	34.5 [1.36]	4.5 [0.18]	45.0 [1.77]	45.0 [1.77]
	NEMA 23 SM 23	35.5 [1.40]	5.5 [0.22]	58.0 [2.28]	58.0 [2.28]
406XR	NEMA 23 SM 23	57.5 [2.26]	5.5 [0.22]	70.0 [2.76]	65.0 [2.56]
	NEMA 34 NEOMETRIC 34	62.0 [2.44]	10.0 [0.39]	83.0 [3.27]	83.0 [3.27]
	APEX 602/604 NEOMETRIC 70	62.0 [2.44]	10.0 [0.39]	70.0 [2.76]	70.0 [2.76]

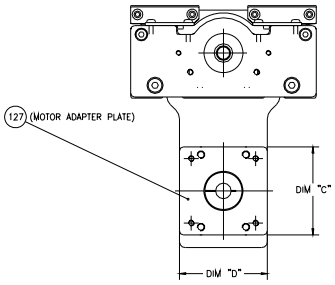

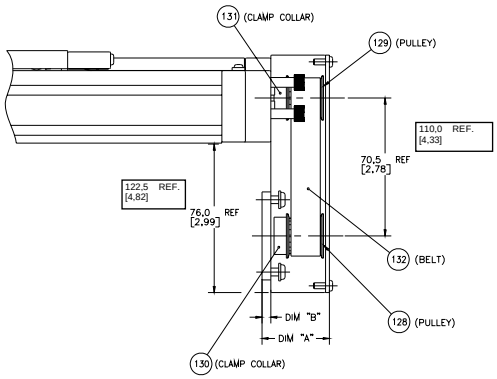

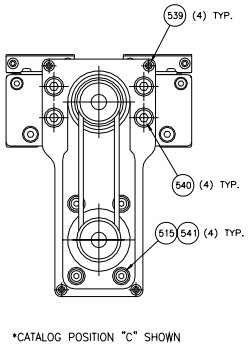

- Apply a few drops of Loctite #609 to screw shaft. Mount Pulley #1 to positioner drive screw shaft by slipping it over the screw shaft and up against the bearing assembly locknut. Tighten clamp screw to 13 in-lbs. Place Shroud over pulley and onto mounting surface. Measure the distance from open face of shroud to the face of pulley flange. The pulley should be recessed some distance from the open face of the shroud. Using depth micrometer record this number.

- Mount parallel mounting shroud (less cover plate) to 404/406XR series linear positioner in desired orientation. Apply a few drops of Loctite # 242 on the screw threads. For *side* positions 'A' and 'B' install and tighten (2) socket head cap screws, Item # 540, through the deep counterbored holes and install and tighten (2) button head screws, Item # 517, through the remaining holes. For *bottom* position 'C' install and tighten (4) socket head cap screws, Item # 540, 517, through the deep counterbored holes.

- Choose desired parallel adapter plate. Mount parallel adapter plate to motor flange using appropriate mounting hardware. Note: Bolt can not stick past adapter plate. Note: The motor side of the plate is piloted for the motor. The flat side goes against the shroud. Apply a few drops of Loctite # 242 to screw threads prior to assembly.

- Apply a few drops of loctite #609 to the motor shaft and loosely mount pulley #2 to motor shaft. Place motor/plate assembly against shroud in the mounting position and measure the distance from the open shroud face to the face of the pulley. The pulley recess distance should match the opposite side recorded earlier. Readjust pulley until the distance is matched and then tighten clamp screw to 13 in-lbs. Note: Once the #609 loctite is applied, this step should be completed within 10 minutes.

- Place drive belt over pulley #1 (drive screw shaft).

- Place motor assembly against shroud and place belt over Pulley #2.

- Loosely mount desired motor using (4) button head screws (404XR) or (4) socket head cap screws (406XR), Item # 515, and (4) spring washers, Item # 541. Note: Mounting holes are located inside mounting shroud. ***Note: It is critical that the correct length bolts be used*.**

- Tension drive belt by applying approximately 15 pound of side force to the motor. Tighten the screws/bolts. Run the table back and forth while observing the belt. The belt should be riding in the center of the pulley surface (between the flanges). If the belt continues to run against one side of the pulley then the alignment needs to be recalibrated. Mount the shroud cover and tighten (4) button head screws, item #539.

Parker Hannifin Corporation
1140 Sandy Hill Road
Irwin, PA 15642

Limit/Home Sensor Mounting Procedure

Tools Required For Adjustment: Allen Key, Phillips Head

Travel Limit Sensors signal the motor to stop whenever the table carriage is approaching the end of travel. These sensors can be adjusted over the table travel. The home sensor provides a fixed reference point which the carriage can be commanded to return repeatedly.

- Identify Limit Sensors and mounting hardware per the configuration, which is appropriate to the application.
    - Normally Closed, Current Sinking
    - Normally Open, Current Sinking
    - Normally Closed, Current Sourcing
    - Normally Open, Current Sourcing
- Attach limit/home sensor trigger flag to the side of the carriage using button head cap screws. The trigger-mounting holes are located on either side of the table for flexibility.
- Mount sensor bracket to the top t-slot of the base extrusion. The bracket assembly should be loosely mounted together when received. To install, loosen the socket head cap screw (do not remove) until the bracket clip can be rotated into the t-slot and the bracket sits flush to the extrusion. Tighten screws.
- Orient wire on switch to desired direction and mount switch to sensor bracket by tightening the Phillips head screw.
- Standard switch settings to utilize full table travel are 89mm (404XR) or 135mm (406XR) from centerline of switch target to the endblock. See sketch below.
- Switches are adjustable by loosening the screws and sliding the assembly along the extrusion.
- 6) Refer to Wire Color Code.

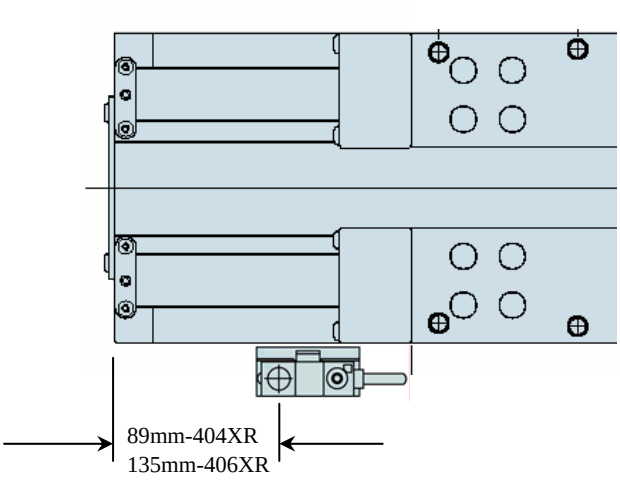

NOTE: When adjusting Sensor Pack switches, the screws may be turned a maximum of 1/4 turn. Any further loosening may result in the nut becoming disengaged. If this occurs the sensor pack will need to be disassembled so that the nut can be reattached.

Parker Hannifin Corporation
1140 Sandy Hill Road
Irwin, PA 15642

Brake Mounting

Tools Required For Adjustment Allen Key, Loctite # 242 & 638, 24V power source, Dial indicator

Electromagnetic Brake Assembly used to prevent back-driving in vertical applications.

- Locate and remove rear bearing cover plate (opposite motor end) by removing (2) button head screws.
- Locate and remove top cover by removing (4) button head screws.
- Locate brake and remove the outer cover by removing (2) socket head cap screws with an M2.5 Allen key.
- Energize the brake by adding a 24V power supply and placing the brown wire in the positive (+) outlet and placing the blue wire in the negative (-) outlet.
- Remove the clamp with the 9/64" Allen key and the clutch. Remove the magnet housing by removing the (2) socket head cap screws with an M2.5 Allen key. Remove the extension shaft.
- 404XR – Clean the ballscrew shaft counterbore, ensuring that no oil or foreign material is present. Using a cotton swab, apply a light film of Loctite #638 to the counterbore ID.
  406XR – Clean the idler end of the ballscrew shaft extending through the bearing block using a clean cloth, and acetone or alcohol. Remove all oil or foreign material that might be present.
- 404XR – Locate the extension shaft (wedge and mandrel) and insert until it stops.
  406XR – Locate clamp collar & mandrel. Slip the clamp collar over the large end of the mandrel and slide it up until it contacts the shoulder. Slip the mandrel through the end block and over the extended portion of the screw shaft. Using the access hole through the endblock, tighten the clamp collar screw.
- Verify concentricity. Using a dial indicator, measure the run out (wobble) on the end of the screw shaft by turning the drive screw. Run out should not exceed .001in"
- Replace top cover and tighten (4) button head screws.
- Connect the brake cable to the extension cable and energize the brake by adding a 24V power supply and placing the brown wire in the positive (+) outlet and placing the blue wire in the negative (-) outlet.
- Leaving the brake energized, slide the magnetic housing over the brake mandrel and tighten with (2) socket head cap screws and (2) schnorrs.
- Slide the clutch and clamp on to the brake mandrel. Use a feeler gage to set the gap at 0.006" for a 404XR brake or 0.007" for a 406XR brake. Tighten the clamp on the mandrel while pressing against the clutch and feeler gage. Remove the feeler gage.
- Move the table the entire travel length and check for unusual noises or dragging while energized. If rubbing occurs check mandrel run out. If run out is within tolerance and noise persists then reset the clutch gap.
- Shut off power supply and be sure the brake is engaged.
- Install brake cover, and tighten without Loctite. Be sure that the wires are snug inside the brake cover including the strain relief, and the yellow cable is to be placed in the wire cavity so that it does not get pinched.

Parker Hannifin Corporation
1140 Sandy Hill Road
Irwin, PA 15642

Rotary Encoder Mounting

Tools Required For Adjustment: Allen Key M1.5, M2, M2.5, M3, 0.050 Dial indicator

Modular Rotary Encoder offers drive screw positional feedback.

- Locate and remove bearing cover plate (opposite motor end) by removing (2) button head screws.
- Clean the idler end of the ballscrew shaft extending through the bearing block using a clean cloth, and acetone or alcohol. Remove all oil or foreign material that might be present.
- Locate rotary encoder and remove cover.
- Locate clamp collar & mandrel. Slip the clamp collar over the large end of the mandrel and slide it up until it contacts the shoulder. Slip the mandrel through the end block and over the extended portion of the screw shaft. Using the access hole through the endblock, tighten the clamp collar screw.
- Verify concentricity. Using a dial indicator, measure the run out (wobble) on the end of the screw shaft by turning the drive screw. Run out should not exceed .001in".
- Align hub on the encoder with the shaft and gently push hub onto shaft until the encoder is resting on the mounting surface. DO NOT push down on encoder - Push on hub only!
- Align the set screw with one of the flats on the mandrel. This can be accomplished by spinning the mandrel (traversing the table).
- Maintain pressure on hub to insure that it is seated in centering mechanism and secure hub to shaft by rotating setscrew clockwise until setscrew makes contact to shaft. Make sure flat on shaft is aligned with setscrew clockwise until setscrew makes contact to shaft.
- Observe the short leg of Allen wrench and rotate additional 1/4in clockwise to apply 20 oz/in torque. (Warning: Over tightening will cause burnelling of the shaft which will make it difficult to remove the encoder if necessary!!!).
- Align the encoder with the threaded holes in the end block. Insert button head screws and tighten.
- Push slide lock in completely. Visually verify that a gap is present between the disk and mask on the underside of the PC board. If no gap is present, remove encoder and reinstall. Verify encoder mounting by traversing carriage. The shaft and encoder PC board should spin freely without any noises or increased torque.
- Install cover by snapping it into place.

Parker Hannifin Corporation
1140 Sandy Hill Road
Irwin, PA 15642

Chapter 6 - Maintenance and Lubrication

Internal Access Procedure

Procedure

The following procedure outlines the steps required to access the ballscrew, square rail bearings, or mounting holes located inside the unit.

Remove carriage end caps by removing eight (8) (4pc/carriage side) socket head cap screws. 404XR series has 4 end caps, 406XR series has 2 end caps.

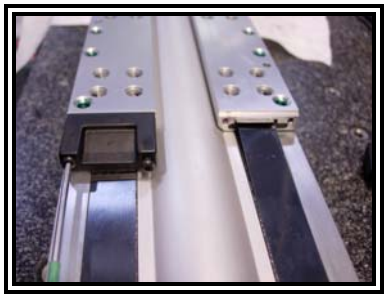

Pull carriage end caps off. Carriage end caps on both sides of carriage must be removed.



Remove all four (4) strip seals clamps by removing eight (8) button head cap screws.



Parker Hannifin Corporation
1140 Sandy Hill Road
Irwin, PA 15642

Lift both strip seals over locator pins with screwdriver. Caution: The strip seal ends are VERY SHARP. It is recommended that a screwdriver be used to lift strip seals over the locator pins.



Pull both strip seals through carriage. Caution: The strip seal ends are VERY SHARP.



Remove bearing cover plate (or brake/rotary encoder cover, depending on options) on non-motor endblock by removing (2) button head cap screws. (Note: There is NO picture shown for this step).

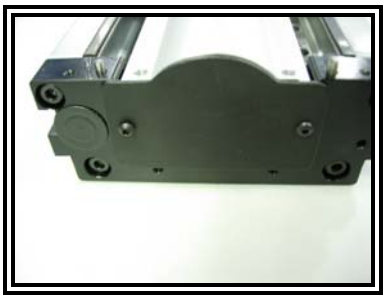

Pull center cover through carriage.

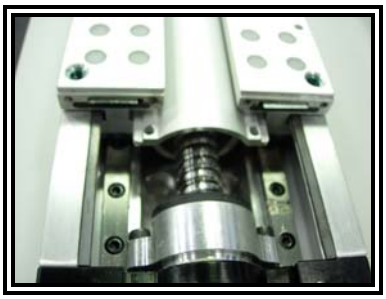

***Reassemble* positioner by reversing steps.**

Parker Hannifin Corporation
1140 Sandy Hill Road
Irwin, PA 15642

Square Rail Bearing Lubrication

See Section on *Internal Access* (Chapter 6) for procedure to access interior of positioner.

Materials Required: Replacement Square Rail Bearing Lubrication (See below for lubrication type and ordering information), Clean Cloth, Small Brush

Lubrication Type for 404xr Series:
For positioners with Clean Room Preparation **'R1' and 'R5'**, Class 1000 compatible (standard): Use *Kyodo Yushi Multemp PS #2*. Contact*:* Kyodo Yushi at +1-630-595-2020 or www.kyodoyushi.co.jp/eng/ for additional technical information, direct purchase or local distributor information.

For positioners with Clean Room Preparation **'R2' and 'R6'** Class 10 compatible: Use *Braycote 803*. Contact: Castrol Industrial at 800-621-2661 for additional technical information, direct purchase or local distributor information.

Lubricant Appearance:
'R1' and 'R5' - Off-White, smooth but slightly tacky
'R2' and 'R6' - Translucent-white, smooth and buttery

Lubrication Type for 406xr Series:
For positioners with Clean Room Preparation **'R1' and 'R5'**, Class 1000 compatible (standard): Use Shell Alvania RL 2. Contact*:* 1+800-840-5737 for all of your service needs. Information is also available on the World Wide Web: http://www.shell-lubricants.com/ for additional technical information, direct purchase or local distributor information.

For positioners with Clean Room Preparation **'R2' and 'R6'** Class 10 compatible: Use *Braycote 803*. Contact: Castrol Industrial at 800-621-2661 for additional technical information, direct purchase or local distributor information.

Lubricant Appearance:
'R1' and 'R5' - amber colored **,**smooth-textured
'R2' and 'R6' - Translucent-white, smooth and buttery

Maintenance Frequency:
For **'R1', 'R2', 'R5',** and **'R6'** Preparations: Square rail bearing blocks are lubricated at our facility prior to shipment. For lubrication inspection and supply intervals following shipment, apply grease every 1000 hours of usage for a typical clean environment. The time period may change depending on frequency of use and environment. Inspect for contamination, chips, etc, and replenish according to inspection results.

Lubricant Application (No Easy Lube):
For both **'R1',** and **'R2'** Preparations: Wipe the rails down the entire length with a clean cloth. Apply lubrication on the rails, using a small brush, allowing a film of fresh grease to pass under the wipers and into the recirculating bearings.

Parker Hannifin Corporation
1140 Sandy Hill Road
Irwin, PA 15642

Lubricant Application (With Easy Lube Option):
For both **'R5'** and **'R6'** Preparations: Move the carriage to the center of travel. Make sure that the lube hole on the carriage is aligned with the lube hole on the base. There is one lube hole on each side of the unit (one hole supplies grease to both the screw and one rail, the other hole applies grease to the other rail). Remove plugs and apply only one pump of grease per rail at a time. Move the carriage 700mm and apply again if necessary. If there is a buildup of grease, wipe the rails down with a clean cloth. After greasing the rails check the encoder scale on the inside wall of the table. If there is grease on the scale clean with a lint free cloth, removing all dirt and grease. Using a lint free cloth, wipe down linear tape scale with isopropyl alcohol. Check the encoder to make sure it is getting proper counts by moving the carriage by hand.

Note: Do not use/mix petroleum base grease with synthetic base grease at any time. For lubrication under special conditions consult factory.

Ground Ballscrew Lubrication

See Section on *Internal Access* for Procedure to access interior of positioner.

Materials Required: Replacement Ground Ballscrew Lubrication (See below for lubrication type and ordering information), Clean Cloth, Small Brush

Lubrication Type for 404xr Series:
For positioners with Clean Room Preparation **'R1' and 'R5'**, Class 1000 compatible (standard): Use *Kyodo Yushi Multemp PS #2*. Contact*:* Kyodo Yushi at +1-630-595-2020 or www.kyodoyushi.co.jp/eng/ for additional technical information, direct purchase or local distributor information.

For positioners with Clean Room Preparation **'R2' and 'R6'** Class 10 compatible: Use *Braycote 803*. Contact: Castrol Industrial at 800-621-2661 for additional technical information, direct purchase or local distributor information.

Lubricant Appearance:
'R1' and 'R5' - Off-White, smooth but slightly tacky
'R2' and 'R6' - Translucent-white, smooth and buttery

Lubrication Type for 406xr Series:
For positioners with Clean Room Preparation **'R1' and 'R5'**, Class 1000 compatible (standard): Use Shell Alvania RL 2. Contact*:* 1+800-840-5737 for all of your service needs. Information is also available on the World Wide Web: http://www.shell-lubricants.com/ for additional technical information, direct purchase or local distributor information.

For positioners with Clean Room Preparation **'R2' and 'R6'** Class 10 compatible: Use *Braycote 803*. Contact: Castrol Industrial at 800-621-2661 for additional technical information, direct purchase or local distributor information.

Lubricant Appearance:
'R1' and 'R5' - amber colored**,** smooth-textured
'R2' and 'R6' - Translucent-white, smooth and buttery

Maintenance Frequency:
For **'R1', 'R2', 'R5',** and **'R6'** Preparations: Ground Ballscrew Nut Packages are lubricated at our facility prior to shipment. For lubrication inspection and supply intervals following shipment, apply grease every 1000 hours of usage. The time period may change depending on frequency of use and environment. Inspect for contamination, chips, etc, and replenish according to inspection results.

Parker Hannifin Corporation
1140 Sandy Hill Road
Irwin, PA 15642

Lubricant Application (No Easy Lube):
For both **'R1',** and **'R2'** Preparations: Wipe the screw down the entire length with a clean cloth. Apply one pump of grease and move the carriage 700mm and apply again if necessary.

Lubricant Application (With Easy Lube Option):
For both **'R5'** and **'R6'** Preparations: See Easy Lube Option from Square Rail Bearing Lubrication on previous page.

Note: Do not use/mix petroleum base grease with synthetic base grease at any time. For lubrication under special conditions consult factory.

Air Purge Hole

The air purge holes are located on the idler end of the unit. Remove black plug to gain access to hole. Air purge holes are NPT (National Pipe Threading) 1/8" – 27.

Parker Hannifin Corporation
1140 Sandy Hill Road
Irwin, PA 15642

Appendix A - Internal Protection

The 404XR is protected from its environment via magnetically retained Protective Seals. Parker Hannifin Corporation has conducted testing to determine the *degree* to which the positioner is protected by using a British standard called an **Ingress Protection Rating (IP Rating)**.

Definition

Reference: British standard EN 60529 : 1992

This standard describes a system of classifying degrees of protection provided by enclosures of electrical equipment. Standardized test methods and the establishment of a two digit numeric rating verify the extent of protection provided against access to hazardous parts, against ingress of solid foreign objects, and against the ingress of water.

First Number – The first number indicates protection of persons against access to dangerous parts and protection of internal equipment against the ingress of solid foreign objects.

1 - Protection against access to hazardous parts with the back of a hand, and protected against solid foreign objects of 50 mm diameter and larger.

2 - Protection of fingers against access to dangerous parts, and protection of equipment against solid foreign objects of 12.5 mm diameter and larger.

3 - Protection against access to hazardous parts with a tool, and protection against solid foreign objects of 2.5 mm diameter and larger.

Second Number – The second number indicates protection of internal equipment against harmful ingress of water.

0 - No special protection provided.

Note: Number Indicators above represent only a partial list of IP Rating specifications.

Warnings (Points of Clarity)

- The specification applies to protection of particles, tools, parts of the body, etc., against access to hazardous parts inside the enclosure. This does not cover external features such as switch pinch points, pinch points caused by the motion of the carriage, or cable carrier assemblies.
- The testing method as specified in the standard uses a solid steel rod of the appropriate diameter at a specified force. The specification does not consider soft or pliable particles. Due to the design of the table and sealing method, a soft particle can compress due to the motion of the table, and reduce its cross-section. This can allow particles to enter the unit.
- In application, shavings or chips commonly created in a machining operation are a greater concern. If any edge or dimension of the “chip” is under the appropriate diameter, it can wedge under and start to the lift the seals. This action will allow larger particles to do the same until failure is reached.

Parker Hannifin Corporation
1140 Sandy Hill Road
Irwin, PA 15642

Using the "IP Ship Kit"

All standard configurations will pass IP20 specifications with the following exception:

All standard configurations can be configured to pass IP30 specifications by utilizing the “IP ship kit” supplied with each unit as follows:

- Using the supplied *plugs*, cover all *counter-bored base mounting holes* that are not covered by your mounting surface. The plugs should be installed from the outside of the unit with the flange flush to the bottom surface. The plugs are clear plastic. Depending on the travel length, some plugs will not be used.

- Using the supplied *set screws*, plug all unused *carriage mounting holes* that are not covered by the load or load plate. Note: Only insert the set screws until they are flush or slightly recessed from the mounting surface. If they are inserted too deeply they will make contact with the extrusion or center cover and may cause failure.

- Using the supplied *set screws*, plug all *threaded base mounting holes* that are not covered by your mounting surface. Depending on the travel length, some set screws will not be used.

- Using the supplied *set screws*, plug the *exposed threaded holes on both end blocks* of the unit. A few drops of Loctite should be applied to the threads prior to insertion to ensure they do not come loose during normal operation.

Parker Hannifin Corporation
1140 Sandy Hill Road
Irwin, PA 15642

Appendix B - Accessories & Spare Parts

400XR Series Options and Accessories (mm)



401XR Limits and Home Sensor



401XR with Linear Encoder plus Sensor Pack



404XR with Lube Option



406XR with Limit and Home Sensor Pack

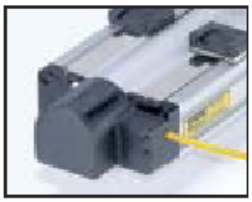

404XR with Brake Option



404XR with Air Purge - Standard on all 404XR & 406XR units

Home H_ or Limit Sensor L_

End of Travel and Home Sensors for the 400XR series are available in a variety of styles. The sensors can be ordered as part of the table or as separate components with the associated mounting hardware or in an enclosed sensor pack. A 5 meter "hi-flex" extension cable (Part No. 003-2918-01) is available for use with the 401XR thru 406XR models having the locking connector option.

- NPN (Sinking) or PNP (Sourcing)
- Normally Closed (N.C.) or Normally Open (N.O.)
- Flying Leads or Locking Connector

Input Power	5-30VDC, 20mA
Output	100mA max
Wire Color Code	(+) Supply: Brown Output: Black (-) Supply: Blue



Order Code	Part No. (Includes Target & Mounting Bracket)	Switch Type	Logic	Cable Length	Connector Option
H2 or L2	006-1639-01	N.C.	Sinking	2,0 m	Flying Leads
H3 or L3	006-1639-02	N.O.	Sinking	2,0 m	Flying Leads
H4 or L4	006-1639-03	N.C.	Sourcing	2,0 m	Flying Leads
H5 or L5	006-1639-04	N.O.	Sourcing	2,0 m	Flying Leads
H6 or L6	006-1639-09	N.C.	Sinking	150 mm	Locking Connector
H7 or L7	006-1639-08	N.O.	Sinking	150 mm	Locking Connector
H8 or L8	006-1639-11	N.C.	Sourcing	150 mm	Locking Connector
H9 or L9	006-1639-10	N.O.	Sourcing	150 mm	Locking Connector

* Applies to 401XR thru 406XR models. 412XR models have limits and homes internally mounted with a connector termination.

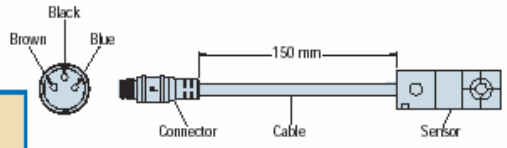

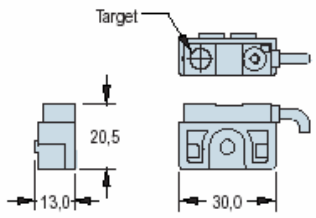

Sensor / Bracket Detail

Brake Assembly B_

Electromagnetic brake assembly used to prevent "backdriving" in vertical applications.

Table Series	Part No.	Input Power	Holding Torque	A Dim.	B Dim.
401/402XR	NA	NA	NA	NA	NA
404XR	006-1627-01	24VDC, 0.46A	2.0 N-m	41,5	46,0
406XR	006-1656-01	24VDC, 0.5A	4.5 N-m	49,9	57,5
412XR	002-1916-01	24VDC, 0.75A	9.0 N-m	54,0	72,0

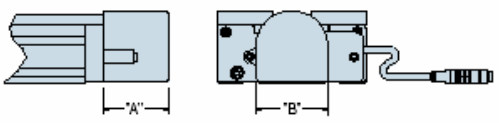

Parker Hannifin Corporation
1140 Sandy Hill Road
Irwin, PA 15642

400XR Series Options and Accessories* (mm)

Rotary Encoder E5

Modular rotary encoder couples directly to the drive screw for position feedback.

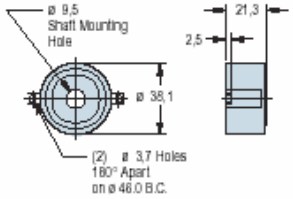

Input Power	5VDC, 135mA
Output	A/B quadrature and reference mark, differential line drive output
Resolution	1250 lines/rev equals 5000 counts post quadrature (1µm with 5 mm lead ballscrew)

Table Series	Part No.
401/402XR	NA
404XR	006-1629-01
406XR	006-1657-01
412XR	002-1917-01

Note: Dimensions shown apply to 404XR and 406XR models. Consult factory for 412XR dimensions.

Linear Encoder (Tape Scale) E_

1.0 µm resolution
0.5 µm resolution
0.1 µm resolution

A linear position feedback device which mounts directly to the table carriage. (Factory installation required.)



Input Power	5VDC, 150mA
Output	A/B quadrature and reference mark, differential line drive output
Resolution	1.0, 0.5, 0.1 micron

Riser Plate

Used to raise the table base to provide clearance for motors larger than NEMA 23 frame size.

Table Series	Part No.
401XR	002-2063-01
402XR	002-2064-01
404XR	002-3619-01
406XR	002-3625-01
412XR	NA

002-3619-01 (404XR)

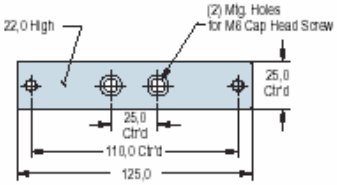

002-3625-01 (406XR)

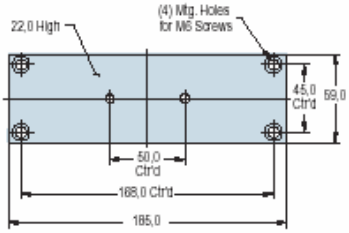

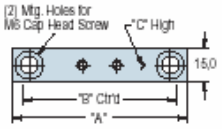

Table Series	"A"	"B"	"C"
401XR	65,0	50,4	17,0
402XR	90,0	75,4	10,0

Toe Clamp

Used for convenient outboard mounting of 406XR to a base plate, riser plates, or Z-Axis bracket.

Table Series	Part No.
404XR	002-3618-01*
406XR	002-3624-01*
412XR	002-2160-01

*All hardware included

002-3618-01 (404XR)

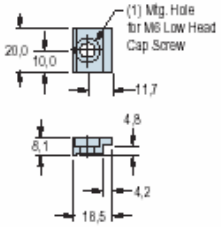

002-3624-01 (406XR)

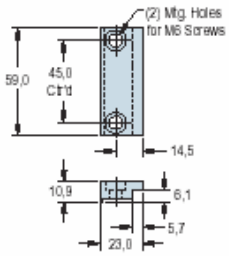

002-2160-01 (412XR)

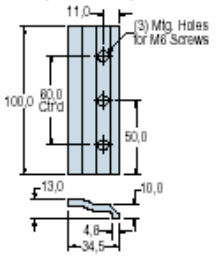

Dowel Pinning P_

Standard dowel pin locating holes are offered on all 400XR units to facilitate repeatable mounting of tooling or payload.

In addition, pinning options (P2 & P3)* are offered for precise orthogonal mounting of the second axis in a multi-axis system. In this case, the bottom side of the table base is match drilled and reamed to the first axis to provide exact orthogonal location. This convenient option eliminates concerns regarding contamination or damage often associated with machining for locating pins in an assembled unit.

*Not available with 401XR or 402XR.

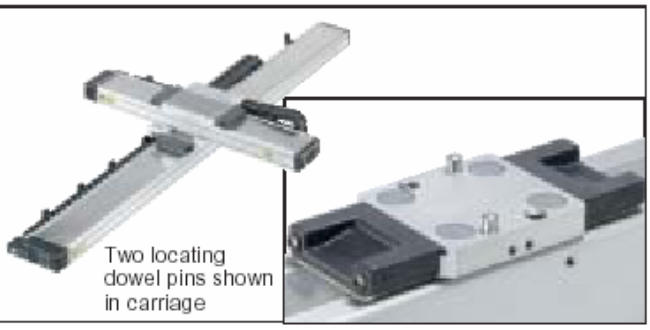

Two locating dowel pins shown in carriage

Parker Hannifin Corporation
1140 Sandy Hill Road
Irwin, PA 15642



Multi-Axis Configurations

Base Axis (X) Models			Second Axis (Y or Z) Models								
		Orientation	401050XR	401XR >50mm	402XR	404XR	404LXR	406XR	406LXR	412XR/LXR	Wedge
	401XR	X-Y	002-2126-01	002-2065-01	–	–	–	–	–	–	–
		X-Y Cartesian	002-2123-01	002-2068-01	–	–	–	–	–	–	–
		X-Z	–	101-0955-01	–	–	–	–	–	–	–
		X-Z Side Mount	002-2123-01	101-0955-01	–	–	–	–	–	–	–
	402XR	X-Y	002-2130-01	002-2066-01	002-2066-01	–	–	–	–	–	–
		X-Y Cartesian	002-2069-01	002-2069-01	002-2069-01	–	–	–	–	–	–
		X-Z	–	002-2069-01	002-2069-01	–	–	–	–	–	–
		X-Z Side Mount	002-2125-01	002-2069-01	002-2069-01	–	–	–	–	–	–
	404XR/LXR	X-Y	100-9193-01	100-9193-01	100-9193-01	Direct Mount*	100-9584-01	–	–	–	100-9274-01
		X-Y Carriage to Carriage	–	–	–	100-3945-01	100-3945-01	–	–	–	–
		X-Y Cartesian Right Hand	002-2162-01	002-2162-01	002-2162-01	–	–	–	–	–	–
		X-Y Cartesian Left Hand	002-2162-02	002-2162-02	002-2162-02	–	–	–	–	–	–
		X-Z	–	–	–	002-1839-01	–	–	–	–	–
		X-Z Side Mount	–	–	–	002-1840-01	–	–	–	–	–
	406XR/LXR	X-Y	100-9194-01	100-9194-01	100-9194-01	Direct Mount	Direct Mount	Direct Mount	Direct Mount	–	100-9274-01
		X-Y Carriage to Carriage	–	–	–	100-4191-01	100-4191-01	100-4191-01	100-4191-01	–	–
		X-Y Cartesian	–	–	–	002-2163-01	002-2163-01	–	–	–	–
		X-Z	–	–	–	002-1823-01	–	002-1817-01	–	–	–
		X-Z Side Mount	–	–	–	002-1824-01	–	002-1818-01	–		
	412XR/LXR	X-Y	–	–	–	Direct Mount or Toe Clamp	Direct Mount or Toe Clamp	Direct Mount or Toe Clamp	Direct Mount or Toe Clamp	000-67484-01	
		X-Y Cartesian	–	–	–	–	–	002-2164-01	002-2164-01	–	–
	ZP200 Wedge	X-Y	–	–	–	100-9274-01	100-9274-01 or Toe Clamp	100-9274-01 or Toe Clamp	100-9274-01	–	–

* An adaptor plate (100-3945-01) is required whenever the X-axis is a parallel motor mount model.

Parker Hannifin Corporation
1140 Sandy Hill Road
Irwin, PA 15642

404XR Couplings

Catalog Coupling Code	Spare Part / Replacement Part Number	Bore Diameter: (Motor Side)	Bore Diameter: (Table Side)
C2	002-1412-02	6.3 mm (0.25")	8 mm
C3	003-1898-53	6.3 mm (0.25")	8 mm
C4	002-1412-14	9.5 mm (0.375")	8 mm
C5	003-1898-65	9.5 mm (0.375")	8 mm
C6	002-1366-32	11.0 mm (0.43")	8 mm
C7	003-1891-95	11.0 mm (0.43")	8 mm

406XR Couplings

Catalog Coupling Code	Spare Part / Replacement Part Number		Bore Diameter: (Motor Side)	Bore Diameter: (Table Side)	
	Travel < 700mm	**Travel ≥ 700mm**		**Travel < 700mm**	**Travel ≥ 700mm**
C2	002-1412-02	002-1412-11	6.3 mm (0.25")	8 mm	12 mm
C3	003-1898-53	003-1898-55	6.3 mm (0.25")	8 mm	12 mm
C4 (w/M3 Motor Blk.)	002-3517-40	002-1412-13	9.5 mm (0.375")	8 mm	12 mm
C4 (w/M4 or M7 Motor Blk.)	002-3517-40	002-3517-41	9.5 mm (0.375")	8 mm	12 mm
C5 (w/M3 Motor Blk.)	003-1898-65	003-1898-21	9.5 mm (0.375")	8 mm	12 mm
C5 (w/M4 or M7 Motor Blk.)	003-1898-109	003-1898-110	9.5 mm (0.375")	8 mm	12 mm
C6	002-3517-35	002-3517-38	11.0 mm (0.43")	8 mm	12 mm
C7	003-1891-95	003-1891-105	11.0 mm (0.43")	8 mm	12 mm
C8	002-3517-34	002-3517-37	12.7 mm (0.50")	8 mm	12 mm
C9	003-1898-106	003-1898-75	12.7 mm (0.50")	8 mm	12 mm
C10	002-3517-36	002-3517-39	14.0 mm (0.55")	8 mm	12 mm
C11	003-1898-107	003-1898-81	14.0 mm (0.55")	8 mm	12 mm

Parker Hannifin Corporation
1140 Sandy Hill Road
Irwin, PA 15642

Appendix C - Clean Room

Class 100 Clean Room Prepared Tables can be ordered as options to standard product. Parker Hannifin Corporation requires that these preparations be completed at the factory. These units should be handled carefully to minimize possible contamination.

The most obvious visual difference to these units is the absence of the customary stainless steel strip seals. Other non-critical components have also been eliminated to reduce the particulate generation.

Through the use of special greases, elimination of bearing shields, and similar activities, particle generation of critical components has been minimized.

The actual measurement of particulate generation is taken at specific locations relative to the positioner, in a controlled environment.

Parker Hannifin Corporation has developed standard options for precision positioning tables prepped for cleanroom applications. Testing was conducted by an independent facility specializing in clean air certification to determine the level of cleanroom compatibility of the Parker Hannifin Corporation 404XR and 406XR series tables. The particle size and population classification defined in Federal Standard 209E was used to establish realistic limitations of standard equipment used within a cleanroom or cleanzone. Tests were performed with the tables in several orientations to approximate most applications.

Test Environment:

- Class II Type A Biological Safety Cabinet, Class 1
- Laser Particle Counter
- 1 CFM Laminar Flow
- Sample Size of 10 CF

Table Set Up :

- Parker Hannifin Corporation 404/406XR series table with "R2" Option
- 100mm moves @ 75mm/sec
- 100% Duty Cycle

Test 1:

- Horizontal Plane
- Particle counter located above table surface

Class 10 Compatible

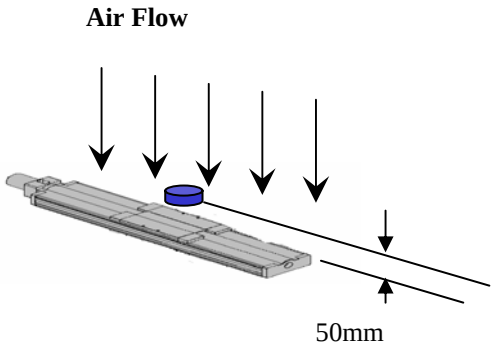

Parker Hannifin Corporation
1140 Sandy Hill Road
Irwin, PA 15642

Test 2:

- Horizontal Plane
- Particle counter located below table surface

Class 100 Compatible

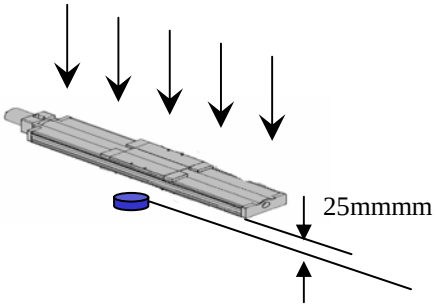

Test 3:

- Horizontal Plane, Inverted Table
- Particle counter located below table surface

Class 100 Compatible

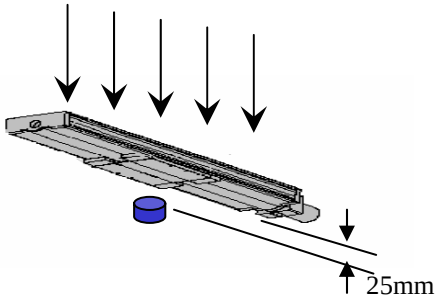

Test 4:

- Vertical Plane
- Particle counter located below table surface

Class 10 Compatible

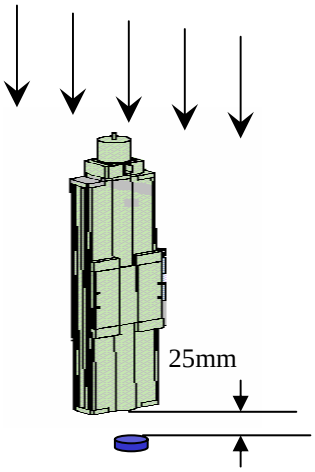

For more information please contact Parker Hannifin Corporation's Application Engineering Department at
800-245-6903.

Parker Hannifin Corporation
1140 Sandy Hill Road
Irwin, PA 15642

Appendix D - Multi-axis Configurations

Mounting Brackets

- Locate the correct Mounting Bracket based on mounting configuration.
- Mount X Axis or X-Y assembly to the work surface using counterbore mounting holes through the base or appropriate toe clamps.
- Orient the Z bracket according to your requirements and mount it to the carriage by inserting M6 SHCS through the clearance holes in the bracket and into the Carriage.
- Mount Z Axis 404/406XR Linear Positioner to the Z-bracket using the appropriate toe clamps or access holes through the base where applicable.
- Align the Z-axis until its axis of operation is perpendicular to the work surface.

Pinning

The following Pinning options can be selected with the 406XR:

- No Pinning
- X Axis Carriage dowel pin holes (requires matched Y Axis)
- Y Axis Base - dowel pin holes (requires matched X Axis)
- Z Axis Base dowel pinning (requires matching Z bracket)

Parker Hannifin Corporation recommends that all pinning options, which are selected, be machined and assembled at the factory.

Parker Hannifin Corporation
1140 Sandy Hill Road
Irwin, PA 15642

Index

A

Accuracy
  Positional, 19
Air Purge Hole, 37
Assembly Diagram, 7

B

Ballscrew
  404XR, 8
  406XR, 10
  Lubrication, 36
Bearing
  Life/Load, 15, 16
  Lubrication, 35
Brake
  Mounting, 31
  Option
    404XR, 9
    406XR, 11
  Specification, 21

C

Clean Room, 44
Clean Room Preparation
  404XR, 9
  406XR, 11
Coupling
  Option
    404XR, 9
    406XR, 11
  Specification
    Precision Grade, 23
    Standard Grade, 23

D

Dimensional Drawings
  404XR, 12
  406XR, 13

E

Easy Lube, 36, 37
Encoder
  Option
    404XR, 9
    406XR, 11

G

Grade
  404XR, 8
  406XR, 10

H

Home Sensor
  404XR, 8
  406XR, 10

I

Internal Access Procedure, 33
Internal Protection, 38

L

Limit/Home Sensor
  Accessories, 40
  Mounting, 30
  Repeatability, 22
  Specification, 22
Linear Encoder
  Resolution, 20
  Specification, 19
  Speed Limit, 20
  Wiring Diagram, 20
  Z Channel, 19
Lubrication, 33
  Ballscrew, 36
  Bearing, 35

M

Maintenance, 33
Motor
  Mounting
    Center Drive, 26
    Parallel, 26
Motor Mount
  Option
    404XR, 9
    406XR, 11
Motor Sizing, 14
Mounting
  Overhang, 24
  Surface Requirements, 24
Multi-axis Configurations
  Mounting Brackets, 46
  Pinning, 46

O

Order Number Nomenclature
  404XR, 8
  406XR, 10

P

Performance, 14
Pinning
  Option
    404XR, 9
    406XR, 11

R

Rated Capacity, 14
Repair Information, 6
Return Information, 6
Riser Blocks, 25
Rotary Encoder
  Accuracy, 21
  Mounting, 32
  Resolution, 21
  Specification, 21
  Wiring Diagram, 21

S

Sensor Pack, 22
Specification
  Mounting Surface, 6
  Point of Measurement, 6
  Temperature, 6

T

Table Travel
  404XR, 8
  406XR, 10
Toe clamp, 25
Translation
  Horizontal, 17
  Vertical, 18
Travel Limit Sensor
  404XR, 8
  406XR, 10

U

Unpacking, 5

W

Warning
  Burnelling, 32
  Strain Relieve Electrical Components, 6
  Vertical Operation, 6
Warnings, 38

Parker Hannifin Corporation
1140 Sandy Hill Road
Irwin, PA 15642