PCL40 Linear Stage

PCL40

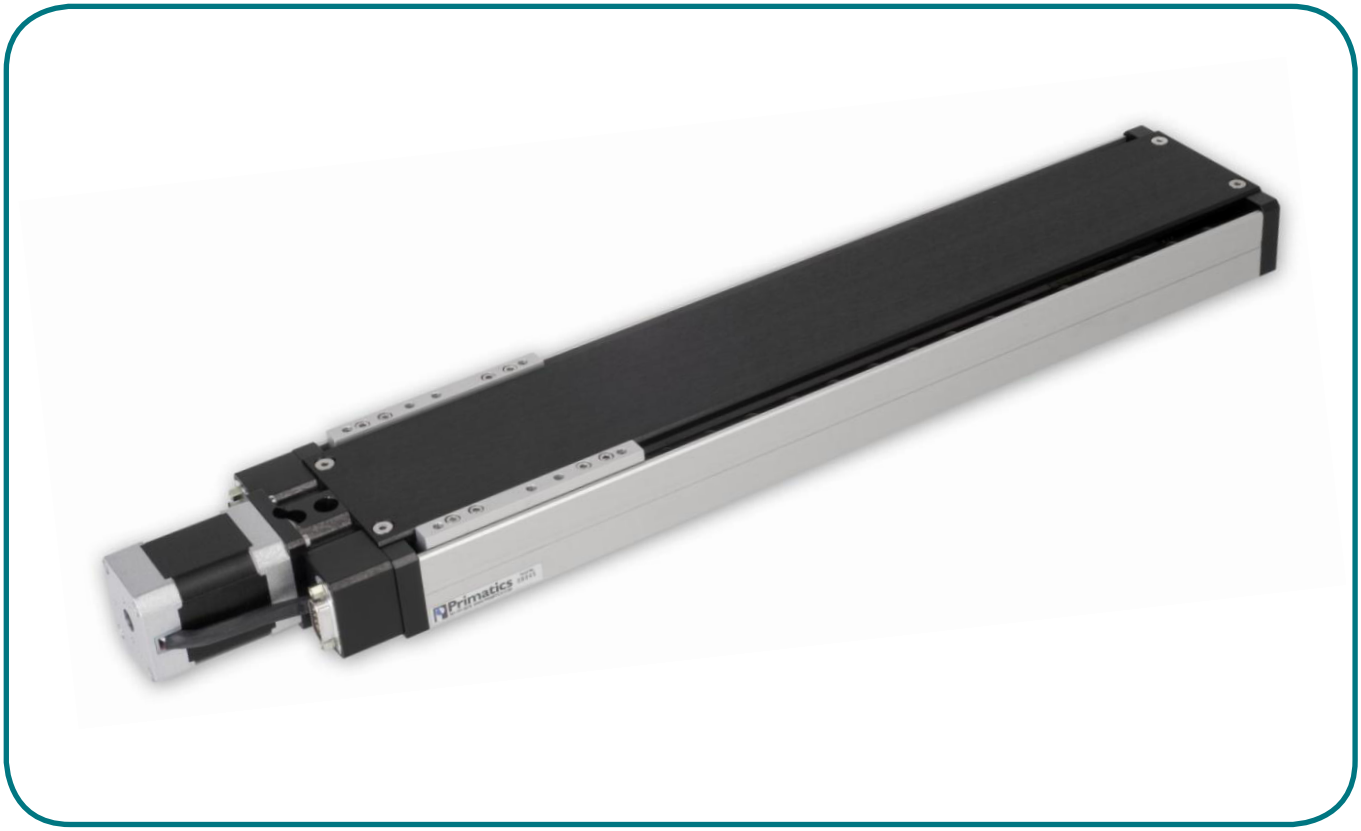

Features

- Travel to 400mm
- Optional rotary encoder resolution to 0.25 micron
- 10 kg payload capacity
- Servo and step motor options
- Limit sensors
- 40mm tall single axis, 80mm tall XY stack
- English and Metric optical breadboard compatible.
- All stages tested for specification compliance

Overview

Primatics PCL40 Series linear positioning stages are our most compact precision ballscrew linear stages. Ideal for applications such as automated microscope inspection, medical assembly and semiconductor wafer inspection. The PCL40 allows the user to fit a standard product into their most space constrained applications.

NEMA 17 In-Line Motor Mount

The PCL40 accepts standard English NEMA 17-frame motors. The motor does not extend below the bottom face so a PCL40 can be mounted directly to a flat surface. An accessory adapter enables a NEMA 23 motor to be mounted in place of a NEMA 17.

Motors and Encoders

The PCL40 can be configured with a servo or step motor. The servo motor option uses the internally mounted rotary encoder with resolutions to 0.25um. The stepper motor configuration can be run open loop or with an internal rotary encoder for close loop operation. The internal encoder affords a short overall length.

XY Stacking and Breadboard Mounting

Two PCL40s can be directly stacked in an XY configuration without the need of an adaptor plate. The total stack heigh is just 80mm. The PCL40 Series can be directly mounted to either an English or Metric pattern optical breadboard without the use of adapters. An optional English or Metric tabletop is also available for the mounting of lab equipment to the stage.

primatics

WWW.PRIMATICS.COM
32114 Mallard Ave. Tangent, OR 97389 USA - Tel: 541.791.9678 - info@primatics.com

Dimensions

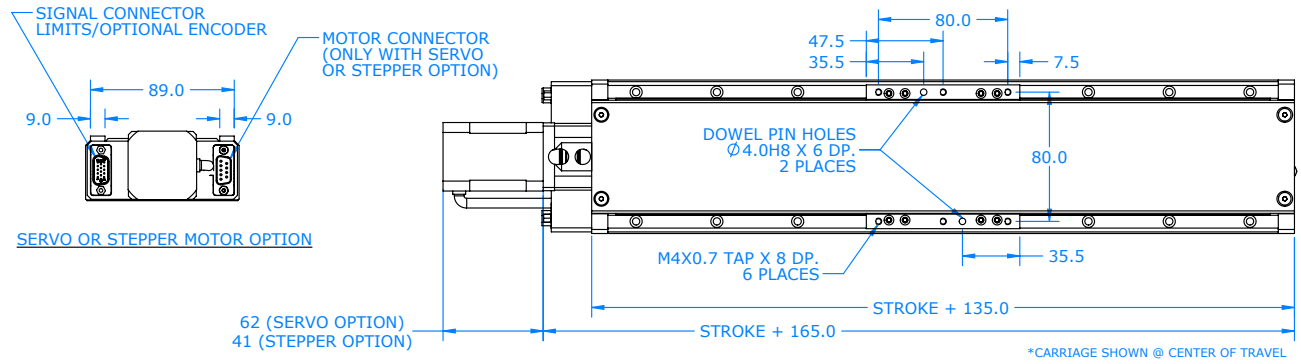

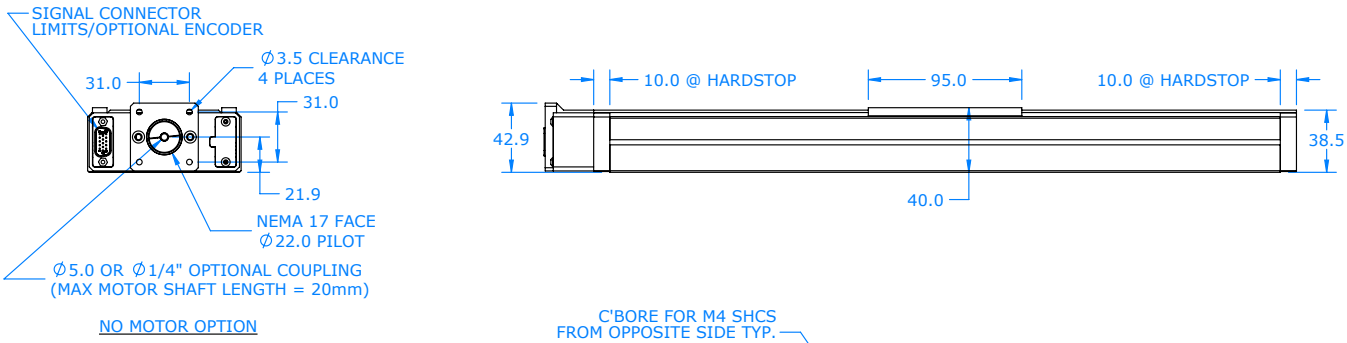

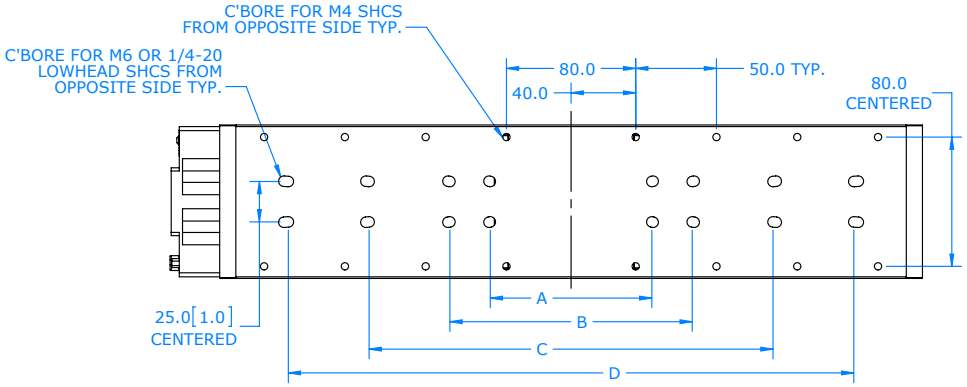

Model	A mm [in]	B mm [in]	C mm [in]	D mm [in]
PCL40-0050	100 [4.0]	n/a	n/a	n/a
PCL40-0100	n/a	150 [6.0]	n/a	n/a
PCL40-0200	100 [4.0]	n/a	250 [10.0]	n/a
PCL40-0300	n/a	150 [6.0]	n/a	350 [14.0]
PCL40-0400	n/a	150 [6.0]	n/a	450 [18.0]

Specifications

Specifications	Notes	PCL40-50	PCL40-100	PCL40-200	PCL40-300	PCL40-400
Travel (mm)		50	100	200	300	400
Servo Positional Accuracy Over Total Travel (µm)	1,3,4,5	+/-5	+/-6	+/-7	+/-8	+/-9
Stepper Positional Accuracy Over Total Travel (µm)	2,3,4,5	+/-8	+/-9	+/-10	+/-11	+/-12
Servo Bi-directional Repeatability (µm)	1,3,5	+/-2 [@ 1µm]; +/-1.5 [@ 0.5µm]; +/-1 [@ 0.25µm]				
Stepper Bi-directional Repeatability (µm)	2,3,5	+/-5				
Straightness of Travel Over Total Travel (µm)	3,5	+/- 2.5	+/- 3	+/- 4	+/- 5	+/- 7
Flatness of Travel Over Total Travel (µm)	3,5	+/- 1.5	+/- 2	+/- 3	+/- 4	+/- 5
Servo Max Speed (mm/s)		300				
Stepper Max Speed (mm/s)		75				
Direct Loading Capacity (kg)		10				
Rotational Inertia (kg-m2) [no motor]		9.25E-06	9.94E-06	1.13E-05	1.27E-05	1.41E-05
Pitch Moment Capacity (N-m)		6.5				
Roll Moment Capacity (N-m)		8.3				
Yaw Moment Capacity (N-m)		7.3				
Stage Weight (kg) [no motor]		2.0	2.3	2.9	3.5	4.1

Notes: 1 – Stages ordered with no motor will be tested with a servo motor with 1250 line encoder; 2 – Measured at 50,000 steps/rev; 3 - Measured 50mm above center of carriage; 4 – Slope corrected; 5 – Stage affixed to a flat continuous surface; All specifications subject to change without notice.

Stage Information	Value
Maximum Acceleration (g's, unloaded)	0.5
Max. Allowable Drivetrain Torque (N-m)	0.7
Typ. Drag Torque (N-m)	0.04
Carriage Mass (kg)	0.38
Life at Listed Specifications (km)	5000

Carriage Stiffness

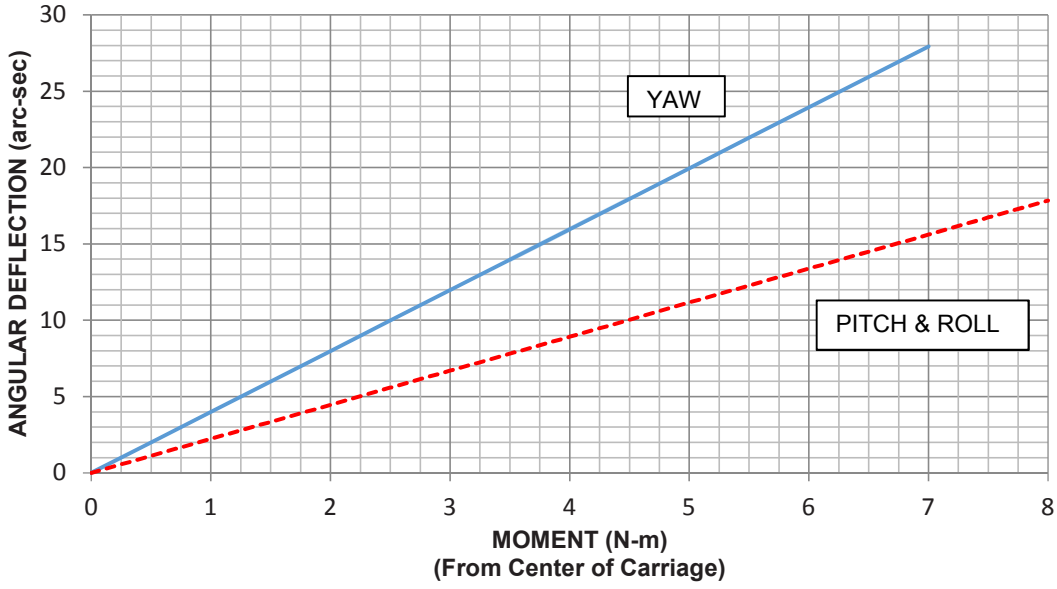

Motor / Encoder, Limit Data

Servo Motor Specifications	Notes	Value
Motor Type		Brushless Servo Rotary Motor
Continuous Torque (N-m)	1	0.12
Continuous Current (Arms)	1	1.25
Peak Torque (N-m)	2	0.24
Peak Current (Arms)	2	2.5
Motor Constant (N-m/vW)		0.041
Torque Constant (N-m/Arms)		0.096
Back EMF Constant (V/Krpm)		7.1
Winding Resistance (ohms)		2.7
Winding Inductance (mH)		5.1
Thermal Resistance (°C/W)		2.4
Poles		8
Rotor Inertia (g-cm^2)		47.6
Weight (kg)		0.43
Hall Sensor Power		5 to 24VDC, 20mA
Hall Outputs		Open collector, current sinking, 20mA max

Notes: 1 - At 25°C maximum temperature rise; 2 - At 10% duty cycle and 1 second maximum. All specifications subject to change without notice.

Step Motor Specifications	Value
Step Angle (deg)	1.8
Holding Torque (N-m)	0.44
Phase Current (Amps)	1.7
Phase Resistance (ohms)	1.5
Phase Inductance (mH)	3.0
Rotor Inertia (g-cm^2)	51.2
Weight (kg)	0.27

Rotary Encoder	Value
Input Power	5VDC ±10%, 150mA
Output	Square wave differential line driver
Index	Synchronized pulse, duration equal to one resolution bit

Limit Sensors	Value
Input Power	5 to 24VDC, 150mA
Output	Open collector, current sinking, 100mA max

Motor Commutation (M1-3 option)

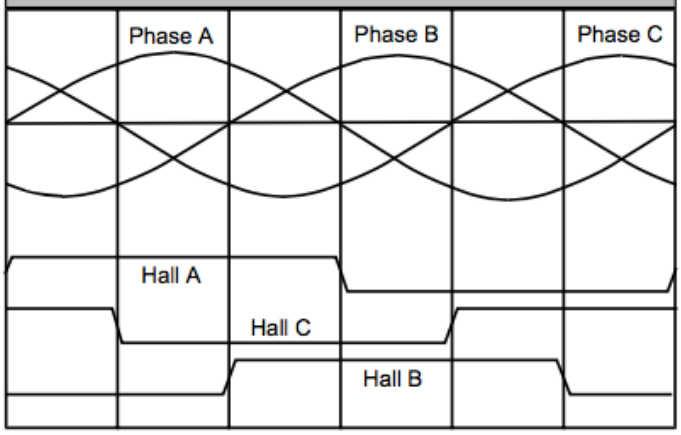

Connectors

Limits/Home/Encoder	
Connector Type: High Density Dsub, 15 pins Pins 7 - 15 used only with encoder option	
PIN	Function
1	Limit Power
2	Limit Power Return and Signal Common
3	Forward Limit - Activates at Full Forward Travel
4	Reverse Limit - Activates at Full Reverse Travel
5	Home
6	No Connection
7	Encoder Shield
8	Encoder 5V
9	Encoder Power Return
10	Encoder Ch A+
11	Encoder Ch A-
12	Encoder Ch B+
13	Encoder Ch B-
14	Encoder Ch I+
15	Encoder Ch I-

Servo Motor	
Connector Type: Dsub, 9 pins	
Pin	Function
1	Hall V+
2	Hall V-
3	Hall A
4	Hall B
5	Hall C
6	Motor Phase A
7	Motor Phase B
8	Motor Phase C
9	Shield / Motor Case

Step Motor	
Connector Type: Dsub, 9 pins	
Pin	Function
1	Motor A+
2	Motor A-
3	Motor Case
4	Motor B+
5	Motor B+
6	Not used
7	Not used
8	Not used
9	Shield / Motor Case

Accessories

Model	Description
CABLE-PCL40-ENC-SENSORS	Cable assembly for limits, home and encoder connector. Un-terminated at user end. 12ft standard.
CABLE-PCL40-STEP MOTOR	Motor cable assembly for use with M1-2 option. Un-terminated at user end. 12ft standard.
CABLE-PCL40-SERVO MOTOR	Motor cable assembly for use with M1-3 option. Un-terminated at user end. 12ft standard.
CABLE-PCL40-SERVO-ADAPTER	Cable assembly for use with M1-3 Servo Motor option. Terminated with circular 26pin connector. 3ft. length.
PCL40-Z-BRACKET	For mounting PCL40-0050 or PCL40-0100 in vertical orientation.
PCL40-TABLETOP-ENGLISH	Machined plate used with PCL40 with english mounting pattern. Fasteners to mount Tabletop to PCL40 are included.
PCL40-TABLETOP-METRIC	Machined plate used with PCL40 with metric mounting pattern. Fasteners to mount Tabletop to PCL40 are included.
PCL40-NEMA23-MOTOR-ADAPTER	Adapter plate for using NEMA23 motor with PCL40 in-line motor mount option. Note the plate and motor will extend below the bottom of the stage.
PCL40-NEMA17 INLINE 5mm SPACER	Use with NEMA17 motors with shafts longer than 20mm.

Z-Bracket

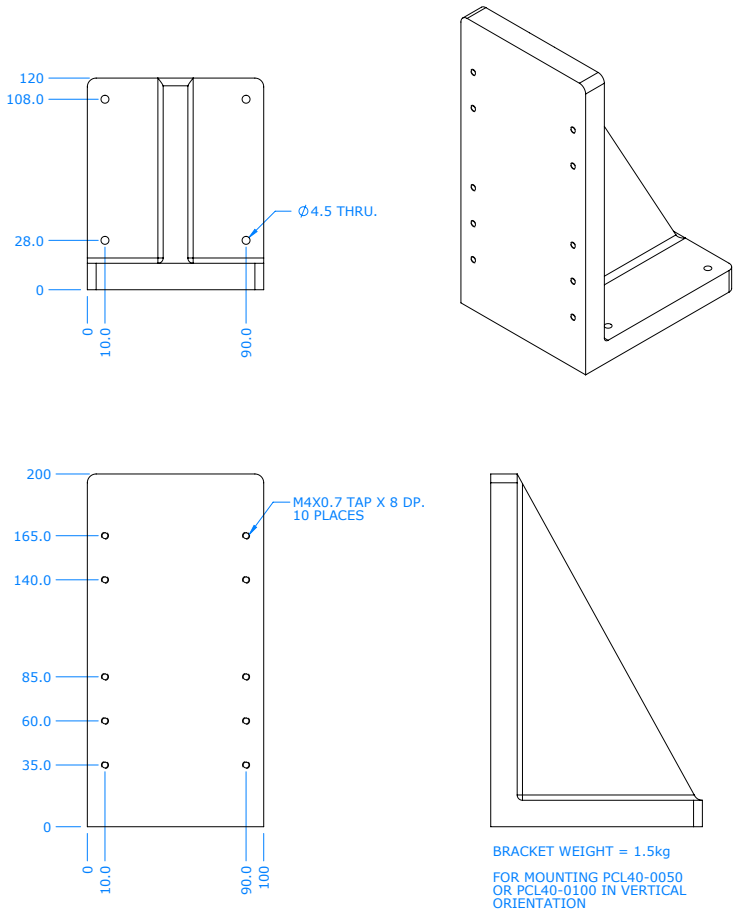

Tabletop

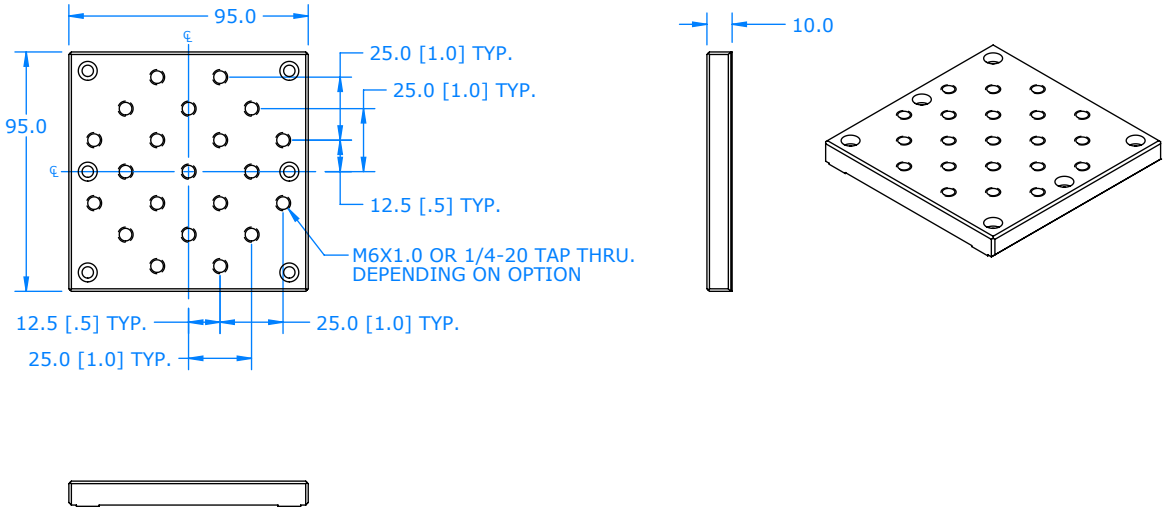

Motor Adapter for NEMA23 motor

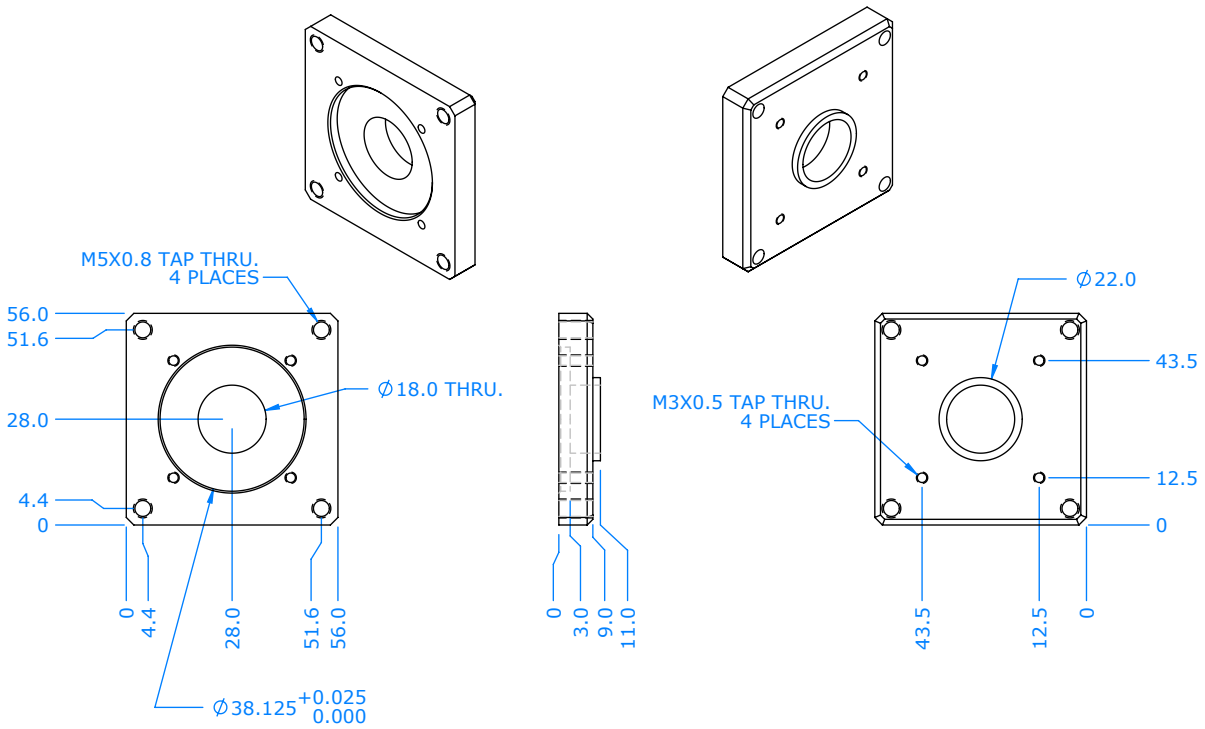

Model Configuration

Example: PCL40 AL 0200P D1 H1 L1 C3 M1-3 E2 P1

Model Series

Base Material
AL: Aluminum

Travel and Grade
0050P: 50mm, Precision
0100P: 100mm, Precision
0200P: 200mm, Precision
0300P: 300mm, Precision
0400P: 400mm, Precision

Drivetrain
D1: 5mm lead ballscrew

Home Sensor
H1: N.C., Current sinking
H2: N.O., Current sinking

Limit Sensors
L1: N.C., Current sinking
L2: N.O., Current sinking

Motor Coupling
C1: none
C2: 1/4 inch
C3: 5mm

Motor Options
M1-1: No motor
M1-2: Step motor (requires C3)
M1-3: Servo motor (requires C3 and either E2, E3 or E4)

Internal Encoder
E1: no encoder
E2: 1250 lines (1um resolution)
E3: 2500 lines (0.5um resolution)
E4: 5000 lines (0.25um resolution)

Protection
P1: Hardcover

Customization
(optional)

Not all configurations are valid - consult factory for alternate ballscrew leads or further assistance