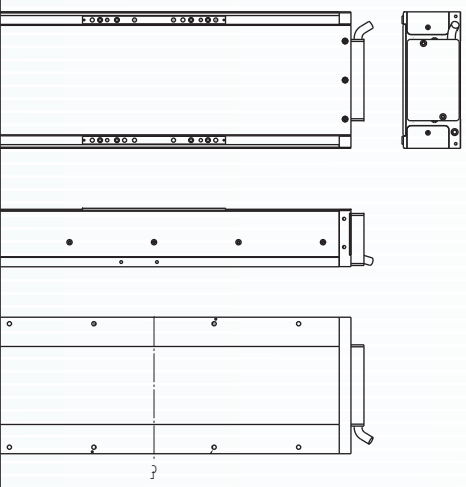

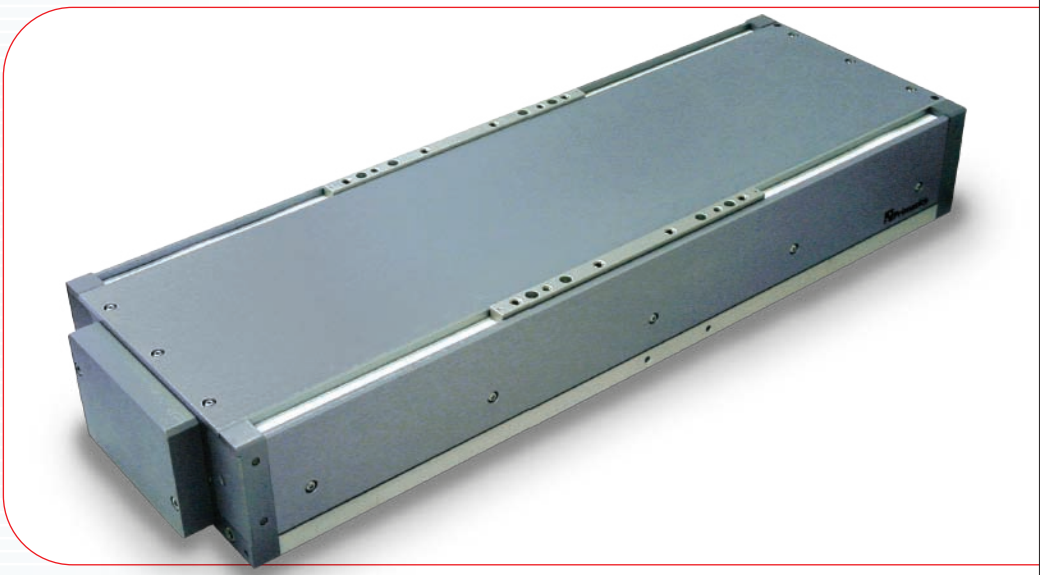

Feature Summary

- Travels up to 1200mm
- Loads up to 100 kg
- Internal linear or rotary encoder resolution to 0.1 microns
- Four motor options and two drivetrain options
- Prima-Flex™ internal cable management system for fully adjustable limit and home sensors
- Aluminum or cast iron base
- All stages individually tested for accuracy, repeatability, straightness and flatness
- Error mapped accuracy option
- Class 10 cleanroom option

Overview

Primatics PLG210 Series positioning stages are the largest of the all-purpose PLG family. Ideal for demanding applications such as inspection, attachment and alignment, the PLG210 offers unparalleled flexibility and allows the user to fit a high performance product into many different applications.

Linear Motor

The PLG210 linear motor stage features a brushless linear motor for unparalleled smoothness of motion. It has the best cross section to thrust ratio on the market, and everything is self-contained thanks to the unique Prima-Flex™ cabling system. Internal encoder resolutions to 0.1 micron are standard.

Frameless Motor

Perfect where stage length is a concern, the PLG210 frameless motor mounts directly onto the ballscrew drivetrain, eliminating the need for a motor coupler. This reduces the footprint of the positioner, while improving the accuracy and dynamic response.

Nema 34 In-Line Motor

The in-line version of the PLG210 accepts standard English Nema 34-frame step and servo motors. Standard options include couplers to accept 1/2", 3/8" and 14mm shaft motors.

Nema 34 Parallel Motor

The PLG210 parallel motor mount offers a space saving alternative to the Nema 34 in-line motor mount. The parallel motor mount incorporates a belt-driven wraparound drive, mountable on either side of the stage. A simple belt tensioning system lets you adjust belt tension in seconds.

Primatics

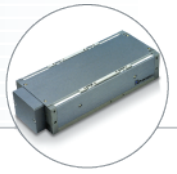
Linear Positioning

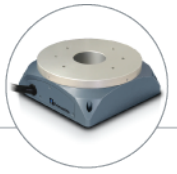
Rotary Positioning


Motion Controls

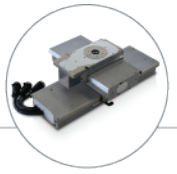
OEM Solutions

PLG210 SERIES

Ballscrew with Frameless Motor

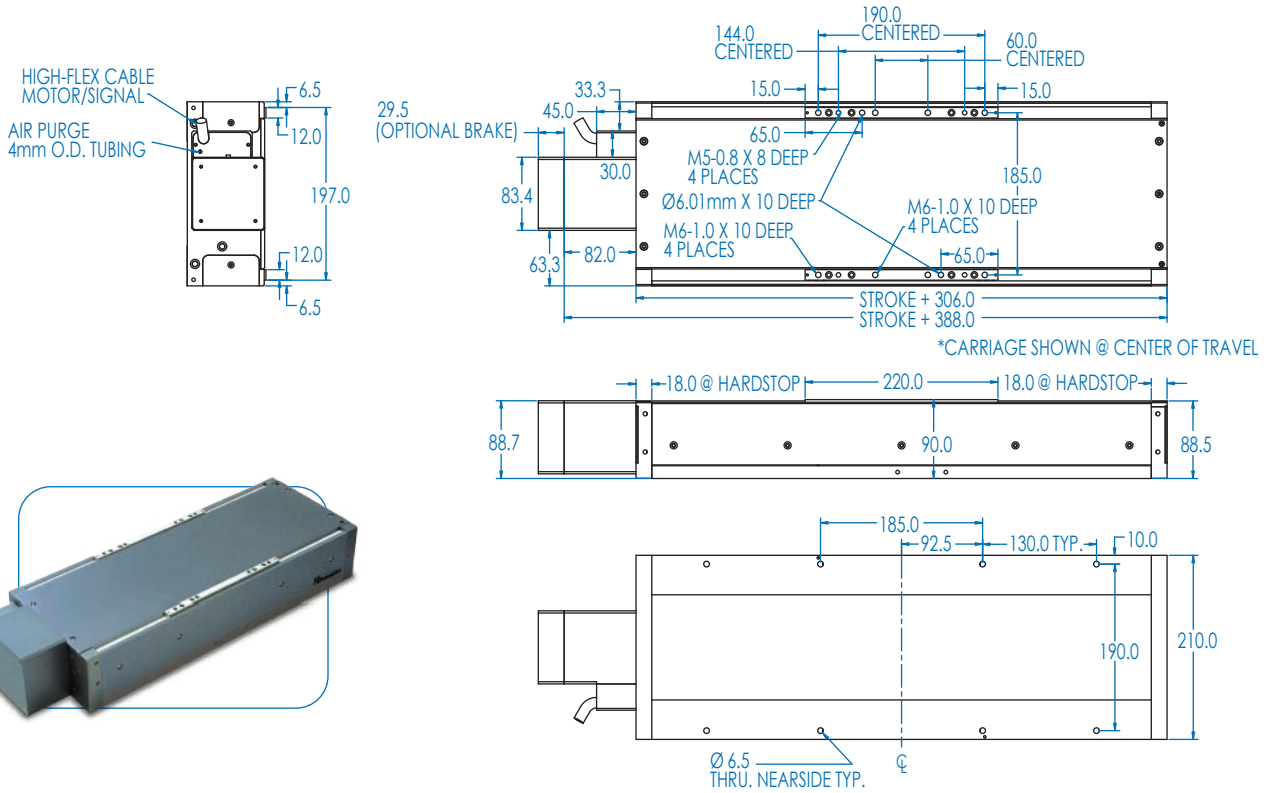

Ballscrew with NEMA34 Parallel Motor Mount

M2 & M3 Orientations Available

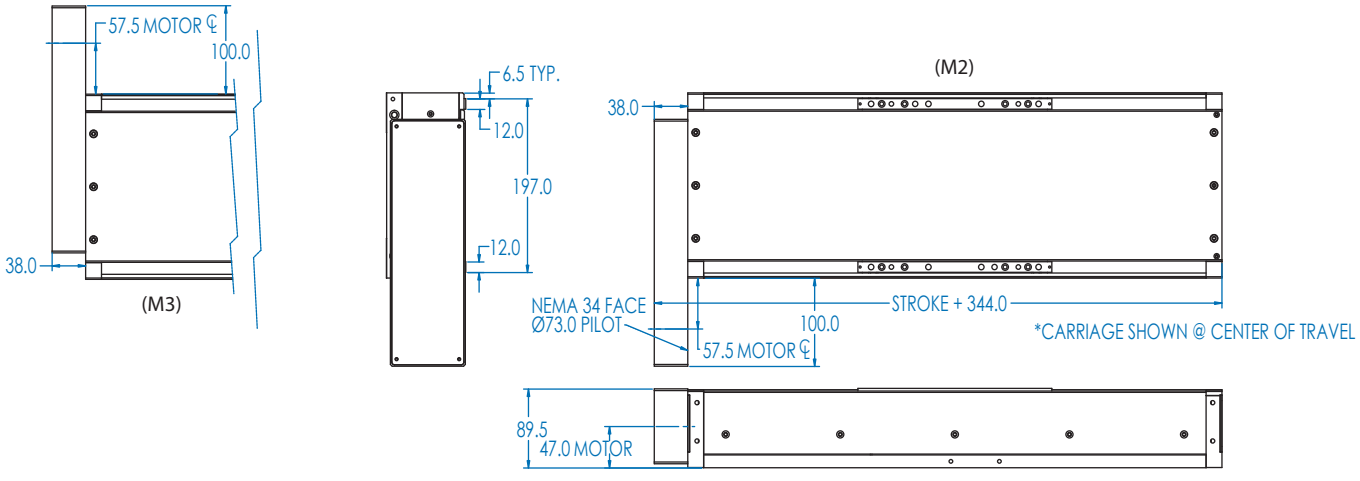

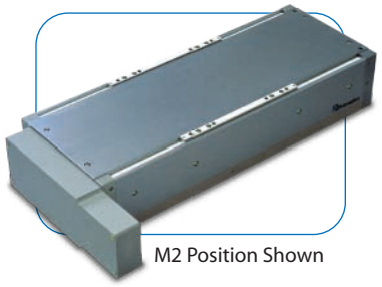

M2 Position Shown

All dimensions subject to change w/o notice.

PLG210 SERIES

Ballscrew with NEMA34 In-Line Motor Mount

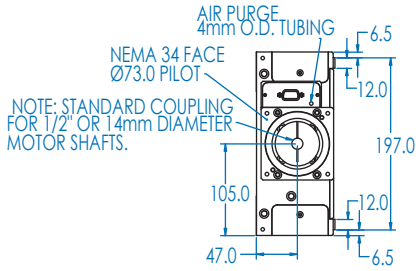

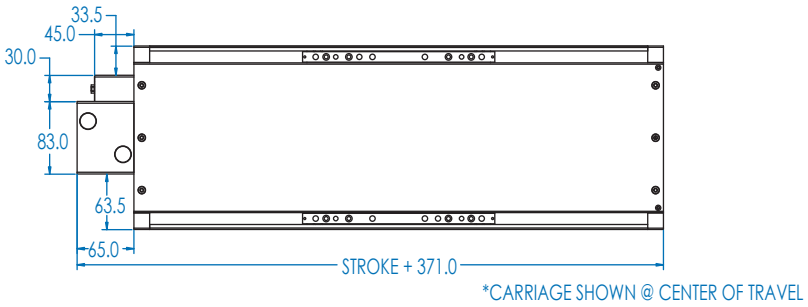

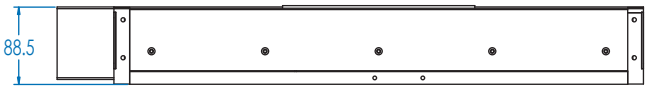

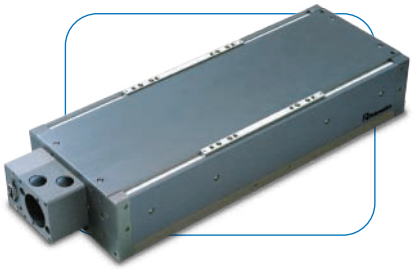

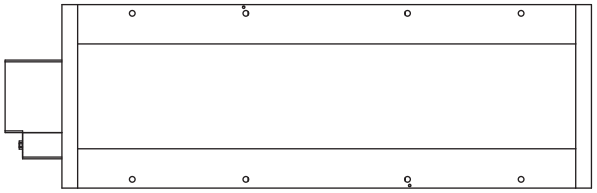

Linear Motor

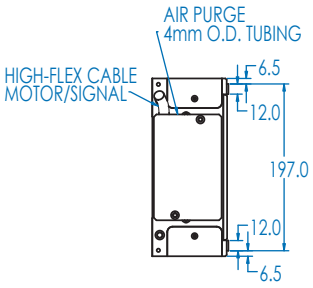

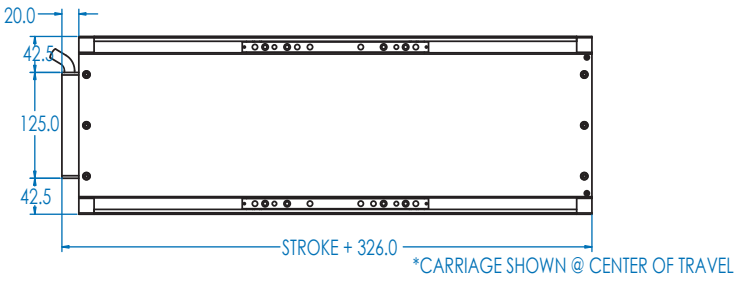

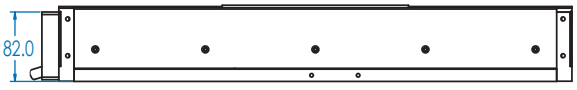

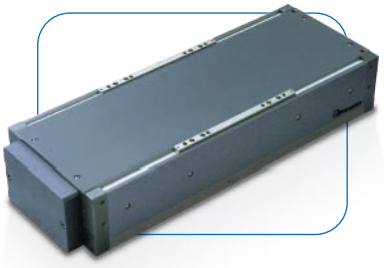

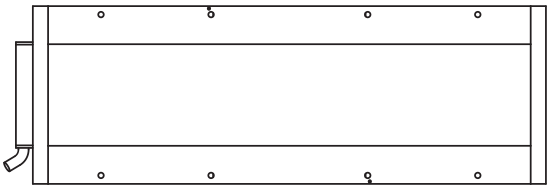

All dimensions subject to change w/o notice.

Ballscrew Drivetrain Specifications

Precision Grade Performance Specs	PLG210-100	PLG210-200	PLG210-300	PLG210-400	PLG210-600	PLG210-800	PLG210-1000	PLG210-1200
Travel (mm)	100	200	300	400	600	800	1000	1200
Positional Accuracy (µm) over Total Table Travel [1,2,3]	+/- 6	+/- 9	+/- 12	+/- 14	+/- 18	+/- 22	+/- 26	+/- 30
Positional Accuracy w/ Linear Encoder (µm) [2]	+/- 3	+/- 5	+/- 6	+/- 7	+/- 10	+/- 13	+/- 16	+/- 19
Error Mapped Accuracy for Stage w/E6 Linear Encoder (µm)	+/- 1.4				+/- 2.0			
Error Mapped Accuracy for Stage w/E4 Linear Encoder (µm)	+/- 1.0				+/- 1.5			
Positional Repeatability (bi-directional) (µm) [1,2,3]	+/- 2.0							
Positional Repeatability w/ Linear Encoder (µm) (0.1, 0.5, 1.0 µ resolution) [2]	+/- 0.5, +/- 1.0, +/- 2.0							
Straightness of Travel (µm) over Total Table Travel [2]	+/- 2.5	+/- 3	+/- 4	+/- 4.5	+/- 7	+/- 9	+/- 11	+/- 13
Flatness of Travel (µm) over Total Table Travel [2]	+/- 1.5	+/- 2.5	+/- 3	+/- 4	+/- 6	+/- 8	+/- 10	+/- 12
Max Speed (mm/s) [3]	300				200			
Direct Loading Capacity (kg)	100							
Axial Loading Capacity (kg)	50							
In-Line Rotational Inertia (kg-m [2])	2.10E-4	2.42E-4	2.75E-4	3.07E-4	3.71E-4	4.35E-4	5.00E-4	5.64E-4
Frameless Rotational Inertia (kg-m [2])	2.51E-4	2.83E-4	3.15E-4	3.48E-4	4.12E-4	4.76E-4	5.41E-4	6.05E-4
Minimum Resolution w/ Linear Encoder (microns)	0.1							
Pitch Moment Capacity (N-m)	75							
Roll Moment Capacity (N-m)	90							
Yaw Moment Capacity (N-m)	70							
In-Line Stage Weight (kg) (Aluminum Base)	18.2	20.5	22.7	25.0	29.5	34.1	38.6	43.2
In-Line Stage Weight (kg) (Cast Iron Base)	30.1	35.4	40.6	45.9	56.5	67.0	77.5	88.1
Frameless Stage Weight (kg) (Aluminum Base)	19.1	21.4	23.6	25.9	30.5	35.0	39.5	44.1
Frameless Stage Weight (kg) (Cast Iron Base)	31.0	36.3	41.5	46.8	57.4	67.9	78.5	89.0

[1] For In-Line / Frameless motor mounts, 1250 line rotary encoder [2] Measured 50mm above center of carriage [3] 5 mm lead ballscrew
All specifications subject to change w/o notice.

Linear Motor Drivetrain Specifications

Precision Grade Performance Specs	PLG210-100	PLG210-200	PLG210-300	PLG210-400	PLG210-600	PLG210-800	PLG210-1000	PLG210-1200
Travel (mm)	100	200	300	400	600	800	1000	1200
Positional Accuracy (µm) over Total Table Travel [3]	+/- 3	+/- 5	+/- 6	+/- 7	+/- 10	+/- 13	+/- 16	+/- 19
Error Mapped Accuracy for Stage w/E6 Linear Encoder (µm)	+/- 1.4				+/- 2.0			
Error Mapped Accuracy for Stage w/E4 Linear Encoder (µm)	+/- 1.0				+/- 1.5			
Positional Repeatability (bi-directional) (0.1, 0.5, 1.0 µm) [3]	+/- 0.5, +/- 1, +/- 2							
Straightness of Travel (µm) over Total Table Travel [3]	+/- 2	+/- 3	+/- 3.5	+/- 4.5	+/- 7	+/- 9	+/- 11	+/-13
Flatness of Travel (µm) over Total Table Travel [3]	+/- 1.5	+/- 2.5	+/- 3	+/- 4	+/- 6	+/- 8	+/- 10	+/- 12
Max Speed (mm/s) [1,2]	1000							
Direct Loading Capacity (kg)	100							
Thrust (w/o air cooling) (N)	110							
Minimum Resolution (µm)	0.1							
Pitch Moment Capacity (N-m)	75							
Roll Moment Capacity (N-m)	90							
Yaw Moment Capacity (N-m)	70							
Stage Weight (kg) (Aluminum Base)	19.1	22.5	26.0	29.5	36.4	43.3	50.2	57.1
Stage Weight (kg) (Cast Iron Base)	31.0	37.5	43.9	50.4	63.3	76.2	89.1	102.0

[1] Maximum obtainable speed is load and move profile dependant [2] 0.1 µm linear encoder is limited to 300mm/s
[3] Measured 50mm above center or carriage [4] Consult factory for 10mm lead ballscrew specifications
All specifications subject to change w/o notice.

Linear Motor Specifications	D5 Motor	D6 Motor
Continuous Force (N) [1]	72.7	97.0
Continuous Current (Amps)	1.0	
Peak Force (N) [2]	330	440
Peak Current (Amps)	4.4	
Force Constant (N/Amps)	74.4	99.3
Back EMF Constant (V/m/sec)	74.4	99.3
Resistance (Ω)	27.3	36.4
Inductance (mH)	36.2	48.3
Magnetic Pitch (mm)	60.96	
Thermal Resistance (C/W)	0.96	0.72

Frameless Motor Specifications	Two Stack
Continuous Torque (N-m) [1]	1.0
Continuous Current (Amps)	7.4
Peak Torque (N-m) [2]	11.5
Peak Current (Amps)	84
Torque Constant (N-m/Amps)	0.136
Back EMF Constant (V/Krpm)	14.3
Resistance (Ω)	0.3
Inductance (mH)	0.8
Rotor Inertia (g-cm ^{2})	1130
Thermal Resistance (C/W)	1.5
Poles	6

Brushless Motor Specifications	5 Stack
Continuous Torque (N-m) [1]	1.7
Continuous Current (Amps)	11
Peak Torque (N-m) [2]	5.3
Peak Current (Amps)	36
Torque Constant (N-m/Amps)	0.16
Back EMF Constant (V/Krpm)	16.6
Resistance (Ω)	0.23
Inductance (mH)	1.1
Rotor Inertia (g-cm ^{2})	2034
Thermal Resistance (C/W)	0.98
Poles	8

[1] At 25°C temperature rise [2] At 10% duty cycle and 1 second maximum
[3] Max speed can be voltage limited [4] Home located in center of travel.
All specifications subject to change without notice

Stepper Motor Specifications	Triple Stack
Step Angle (deg)	1.8
Holding Torque (N-m)	9.2
Series Phase Current (Amps)	5.0
Series Phase Resistance (Ω)	0.8
Series Phase Inductance (mH)	8.5
Detent Torque (N-m)	0.23
Rotor Inertia (g-cm ^{2})	1800
Length (mm)	126

Encoder Specifications	Specification
Input Power (ma)	5 VDC +/- 5%, 150 ma
Output	Square wave differential line driver
Reference (Z channel)	Synchronized pulse, duration equal to one resolution bit
Maximum Speed (m/s) [3]	1.0 micron resolution = 2.6 0.5 micron resolution = 1.3 0.2 micron resolution = 0.6 0.1 micron resolution = 0.3 Analog output = 2.6

Limit & Home Specifications	Specification
Input Power	+12 to +24 VDC, 50 ma
Output [4]	NC Current Sinking, Sink current maximum of 100 ma

Hall Effect Specifications	Specification
Input Power	+5 to +12 VDC, 30 ma
Output	Open collector, Current sinking, 20 ma Max

Rotary Brake Specifications	Specification
Input Power	24 VDC, 0.5 A
Holding Force (kg) (5mm lead)	50

Commutation Chart

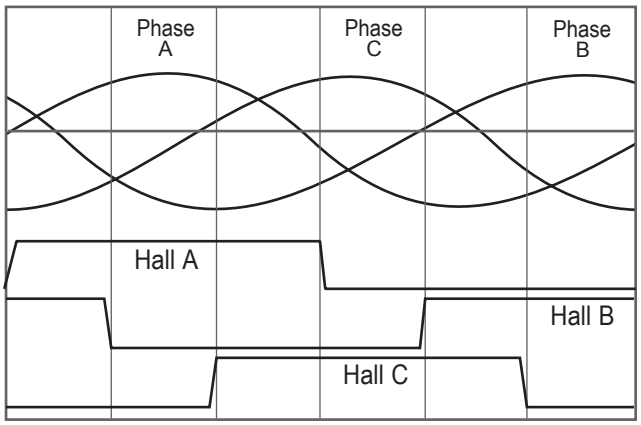

Stage Information	PLG210-D1	PLG210-D2	PLG210-D5	PLG210-D6
Carriage Mass - Aluminum (kg)	3.6		3.9	5.1
Carriage Mass - Cast Iron (kg)	6.7		7.0	9.7
Optional Tabletop Mass (kg)	1.8			
Maximum Acceleration (G's) (unloaded)	1.0		3.0	
Max Breakaway Torque/Force (N-m)/(N)	0.20 N-m	0.31 N-m	13.3 N	
Max Running Torque/Force (N-m)/(N)	0.17 N-m	0.25 N-m	12.2 N	
Maximum Motor Bus Voltage (VDC)	170		90	
Length of Stage Cable (mm)	350			
Life at Listed Specification x 50 km	100			

Servo Axis connector for tables that include Frameless or Linear motors, brake and encoder

Connector on stage: FCI (Burndy) Male, circular connector, 28 contacts, size 20 shell Pin-out

Pin	Function
A	Motor A
B	Motor B
C	Motor C
D	Motor Shield
E	Encoder 5V - power for encoder
F	Encoder A+ output
G	Encoder A- output
H	Encoder B+ output
J	Encoder B- output
K	Encoder Shield
L	12VDC - for limit, home, and temp sensor
M	DCCOM
N	Home - Switch to DCCOM when on forward side of home position
P	Brake release output (24VDC)
R	Brake return
S	Chassis
T	Hall V+
U	Hall V
V	Encoder Common
W	Encoder Index +
X	Encoder Index -
Y	Forward Limit Switch - switch to DCCOM in normal operation
Z	Reverse Limit Switch - switch to DCCOM in normal operation
a	NC
b	Hall A
c	Hall B
d	Temperature monitor - connect to DC Common for temperature OK
e	Hall C

Stage connector for tables without motor or internal encoder

Connector on stage: Dsub 9 position with pins
Mating connector: Dsub 9 position with sockets

Pin	Function
1	12VDC - for limit, home, and temp sensor
2	DCCOM
3	Forward Limit Switch - switch to DCCOM in normal operation
4	Reverse Limit Switch - switch to DCCOM in normal operation
5	Home - switch to DCCOM when on forward side of home position
6	Brake release output (24VDC)
7	Brake return
8	NC
9	NC

Stage with limit / home sensors, internal encoder, brake, without motor

Connector on stage: Hi-Density Dsub 15 position with pins
Mating connector: Hi-Density Dsub 15 position with sockets

Pin	Function
1	12VDC - for limit, home, and temp sensor
2	DCCOM
3	Forward Limit Switch - switch to DCCOM in normal operation
4	Reverse Limit Switch - switch to DCCOM in normal operation
5	Home - switch to DCCOM when on forward side of home position
6	Brake release output (24VDC)
7	Brake return
8	Encoder 5+ (power for encoder)
9	Encoder Common
10	Encoder A+ ouput
11	Encoder A- output
12	Encoder B+ output
13	Encoder B- output
14	Encoder Index + output
15	Encoder Index - output

Stage with limit / home sensors, internal encoder, without motor and brake

Connector on stage: Hi-Density Dsub 15 position with pins
Mating connector: Hi-Density Dsub 15 position with sockets

Pin	Function
1	12VDC - for limit, home, and temp sensor
2	DCCOM
3	Forward Limit Switch - switch to DCCOM in normal operation
4	Reverse Limit Switch - switch to DCCOM in normal operation
5	Home - switch to DCCOM when on forward side of home position
6	NC
7	Encoder Shield
8	Encoder 5+ (power for encoder)
9	Encoder Common
10	Encoder A+ ouput
11	Encoder A- output
12	Encoder B+ output
13	Encoder B- output
14	Encoder Index + output
15	Encoder Index - output

Non-Error Mapped Accuracy Sample Plot

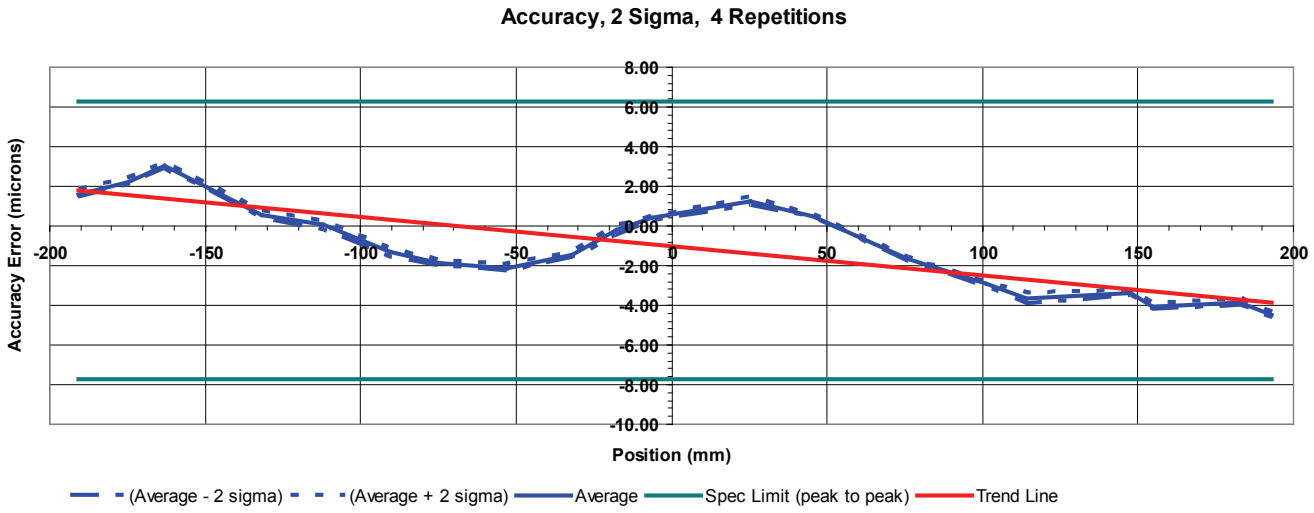

Test Conditions	
Air Temperature Sensor (degC)	20.0
Air Pressure (mm Hg)	760.0
Relative Humidity (%)	50

Results (µm)	Actual	Spec
Accuracy	7.80	14.00 (+/- 7)
	Current	**Computed**
EncoderRatio (counts/mm)	10000.0000	10000.11470

Error Mapped Accuracy Sample Plot

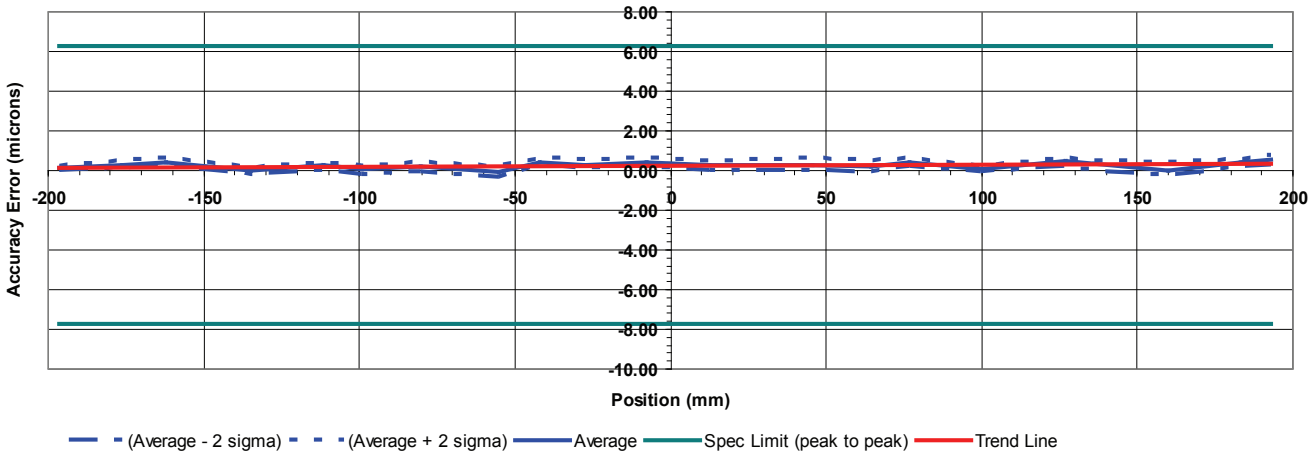

Test Conditions	
Air Temperature Sensor (degC)	20.0
Air Pressure (mm Hg)	747.8
Relative Humidity (%)	40

Results (µm)	Actual	Spec
Accuracy	1.14	2.00 (+/- 1)
	Current	**Computed**
EncoderRatio (counts/mm)	10000.0000	9999.9955

Optional Aluminum Top Plate

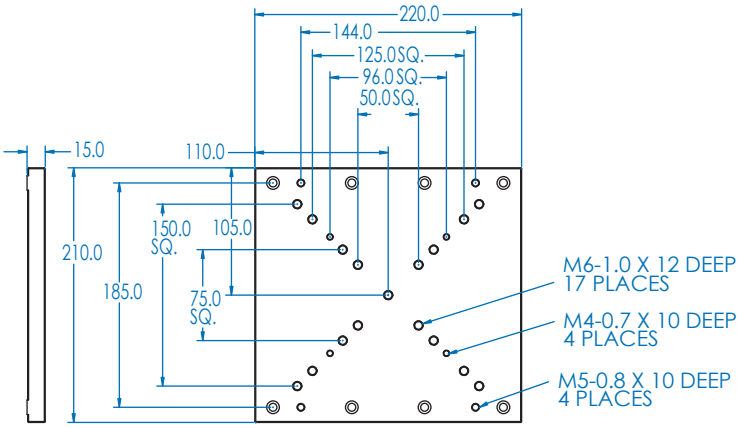

Optional High Flow Air Purge

Ballscrew Drivetrain

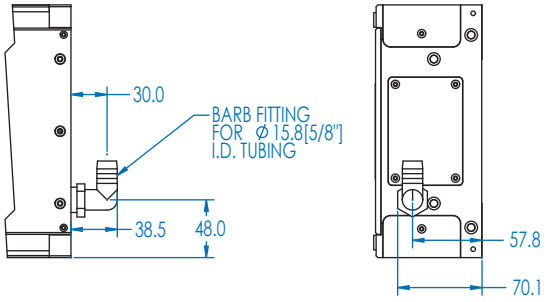

Linear Motor Drivetrain

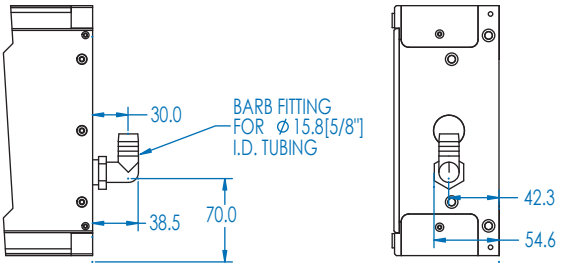

Optional Extended Linear Motor Carriage

(D4 Option, Linear Motor Option Only)

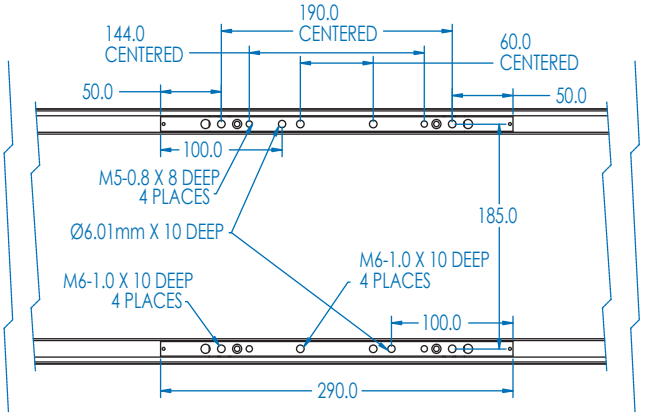

PLG210 Carriage Stiffness

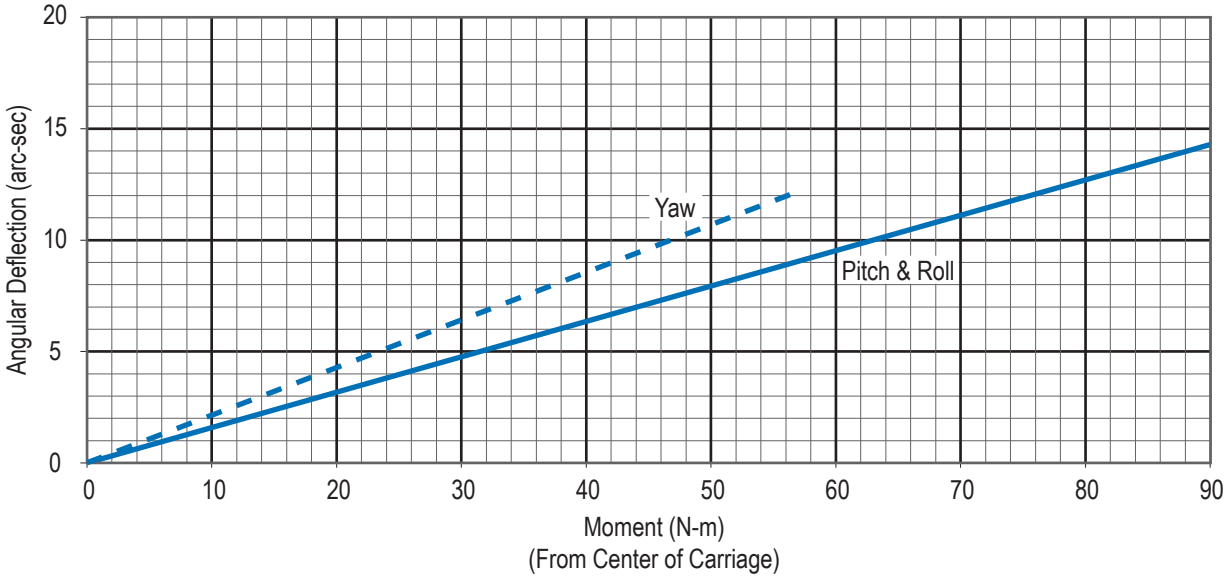

Primatics PLG210 Series linear positioning stages are available with many options designed to optimize stage performance for specific applications. Most options have no effect on the overall dimensions of the PLG210, allowing the design engineer to make changes and upgrades to the PLG210 without affecting machine design.

Gray Iron Base

The PLG210 comes standard with an aluminum base, but a gray iron base with electroless nickel finish is also available. Gray iron has superior stability and dampens out vibration approximately 250 times faster than aluminum. In addition, gray iron has a thermal expansion coefficient half that of aluminum, making gray iron the material of choice in applications requiring accuracy in a thermal gradient.

Protection Systems

The PLG210 offers several levels of protection for applications in harsh environments. The first level of protection includes a hard cover shell over the length of travel. The second level of protection includes our proprietary recirculating belt system. Our unique protection system offers several advantages over other protection schemes. Recirculating belts do not increase the length of the stage, reducing the envelope size and stage cost. Since recirculating belts do not create the internal pressure differentials bellows can, particles are not drawn into the stage. Our recirculating belt system is also dynamically tensioned, so unlike steel strip protection systems, it will not develop play. All stages with the recirculating belts option come with a high pressure air purge, as well as an optional high flow air purge.

Class 10 Cleanroom

The Class 10 cleanroom option is ideal for medical and semiconductor applications where particle generation must be kept to a minimum. The inherent design of the PLG210 makes it operate very clean, and we use clean room rated lubrication for all bearing and drivetrain components. A high flow evacuation port is also included. Since recirculating belts do not create the internal pressure differentials bellows can, particles are not drawn into the stage.

Error Mapping

Error mapping is available for the PLG210 positioning stage for applications requiring very high levels of accuracy. Error Mapping is a technique where one relies on the repeatability of a stage to improve its accuracy. A metrology device measures both accuracy and repeatability of random positions along the travel of a positioning stage. This data is used to generate an error map. The metrology data shows how far long or short the positioning table travels when trying to reach a particular set point. Since the inaccuracy is known along the entire travel, the positioning stage can be commanded to move to a set point that is long or short of the actual desired position, compensating for the inaccuracy of the stage.

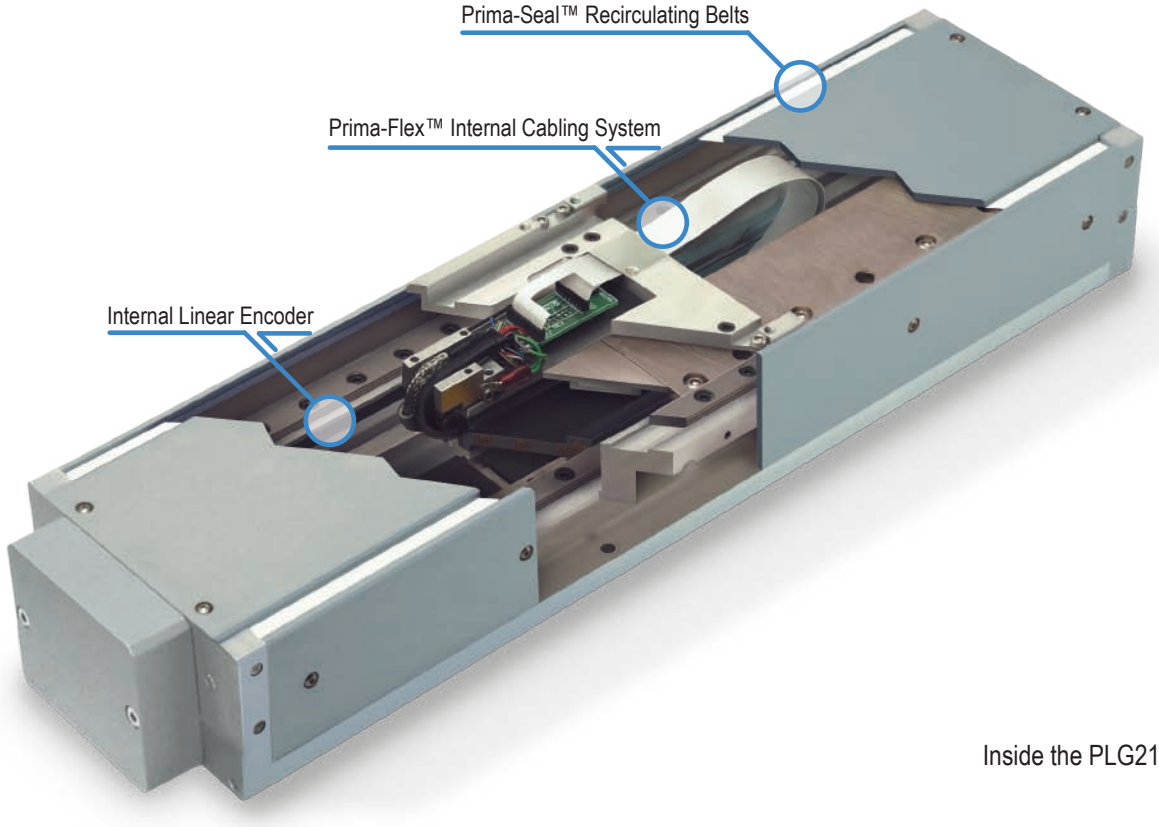

Inside the PLG210

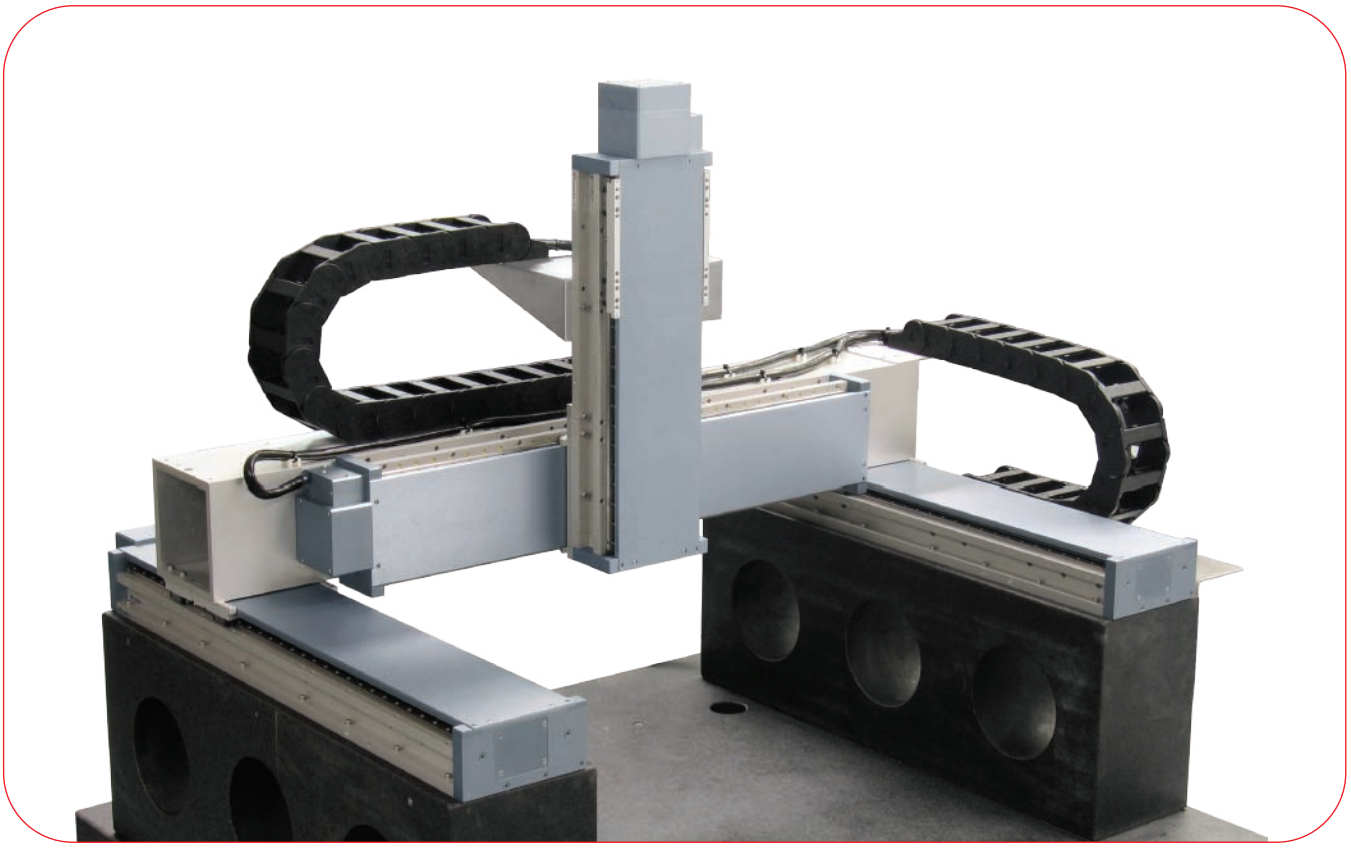

Gantry constructed from PLG positioning stages

Brakes
All PLG210 ballscrew stages offer an optional ballscrew mounted failsafe brake. The brake is mounted internally, reducing the envelope of the stage. 24 VDC is required to release the brake.

Performance Verification
All PLG210 performance specifications are verified with a laser interferometer system. A full set of accuracy, repeatability, straightness and flatness plots are included with each stage. Calibration data is also provided. In addition to laser interferometer data, a 12 hour burn-in test is performed, insuring that the stage will perform as specified over a long period of time.

Easy Access Lube Ports
Relubricating the PLG210 stage takes only minutes thanks to our easy-access lube ports. Access to the linear guideways and ballscrew is achieved by removing only the side plates of the PLG210, eliminating time-consuming disassembly for maintenance.

Flexible Home & Limit Positions
The Prima-Flex™ cable management system allows the home & limit sensors to move with the carriage, while keeping the target fixed. This configuration allows infinite flexibility in the home & limit transition positions, as well as allowing the transition points to be repositioned without any rerouting of cables.

Multi-Axis Cable Management
The Prima-Flex™ cable management system can also be adapted for multi-axis configurations. Additional I/O and air-lines can be routed through the cable management as well. Consult factory for more information.

SimpleMatch™
All of our positioning stages can work with any of our motion controls, and in most cases it's as easy as connecting just a single cable between the two. Our stages are configured to easily operate with third-party drives or controls as well. In many cases we've already created special cable assemblies or instructions specifically for that purpose.

ORDERING INFORMATION MATRIX

OPTIONS:

SAMPLE MODEL NUMBER:



Model Series & Table Width
Linear Guide Bearings - 210 mm.....**PLG210**

Base Material
Cast Iron[2].....**CI** Aluminum.....**AL**

Table Travel, Precision Grade
100 mm[1].....**0100P** 600 mm[1].....**0600P**
200 mm[1].....**0200P** 800 mm[1].....**0800P**
300 mm[1].....**0300P** 1000 mm[1,2].....**1000P**
400 mm[1].....**0400P** 1200 mm[1,2].....**1200P**

Drivetrain
5 mm Lead Ballscrew.....**D1** Linear Motor- Standard..**D5**
10 mm Lead Ballscrew[2].....**D2** Linear Motor- Extended[3].**D6**

Home Sensor
N.C. Current Sinking .....**H1** N.O. Current Sinking **H2**

Travel Limits
N.C. Current Sinking.....**L1** N.O. Current Sinking.....**L2**

Motor Coupling
No Coupling .....**C1** 14mm Flexible Disk **C7**
0.5" Flexible Disk[4] .....**C6** 0.375" Flexible Disk **C8**

Motor Mount
Nema 34 In-Line.....**M1** Nema 34 Parallel, Position 2[5].....**M3**
Nema 34 Parallel, Position 1[5].....**M2** Linear/Frameless.....**M4**

Motor Type
Step Motor w/connector **1**
Brushless Servo Motor w/ 1250 Line Encoder.....**2**
Linear Motor.....**5**
No Motor.....**6**
Frameless Motor - Double Stack.....**7**

Encoder
No Encoder.....**E1** Linear Encoder - 0.2 µm....**E6**
Linear Encoder - 1 µm....**E2** Linear Encoder - 5.0 µm....**E7**
Linear Encoder - 0.5 µm....**E3** Analog Output - 1VPP.....**E8**
Linear Encoder - 0.1 µm....**E4** Rotary Encoder - 2500 lines.[6]....**E9**
Rotary Encoder - 1250 lines.[6].....**E5** Rotary Encoder - 5000 lines.[6]....**E0**

Brake Option
No Brake.....**B1** Failsafe Brake[7].....**B2**

Protection Level
Level 1 - Hardcover.....**P1**
Level 2 - Hardcover, Belts, Hi Pressure.....**P2**
Level 5 - Class 10 Prep (Hardcover, Belts, Hi Flow).....**P5**

Options
Error Mapping .....**M**
No Options .....**(Leave Blank)**

[1] Standard Linear Motor Travel [2] Precision Rolled [3] Reduces Travel by 75mm
[4] Standard on In-line/Parallel Stages [5] Accuracy & Repeatability are Derated [6] On Ballscrew Shaft [7] Ballscrew Only
* **Not all configurations are valid. Consult factory for assistance.**

32114 Mallard Ave., PO Box 409, Tangent, OR 97389-0409, USA | Phone: [541] 791-9678 | Toll Free: [888] 754-3111 | Fax: [541] 791-9410
www.primatics.com