LK⁺/LPK⁺ – Economical right-angle precision

Economical bevel gears with optional planetary stage



LK⁺/LPK⁺

Specifications \ Version	LK⁺/LPK⁺		
	+	++	+++
Positioning accuracy	LK⁺ LPK⁺		
Rigidity	LK⁺ LPK⁺		
Smooth-running	LK⁺ LPK⁺		
Speed capacity		LK⁺ LPK⁺	
Power density	LK⁺	LPK⁺	
Max. axial/radial forces	LK⁺ LPK⁺		



Belt pulley (PLPB)

Couplings





Shrink disc



LPBK+: Right-angle gearhead with flange for toothed belt pulleys

Rack / Pinion

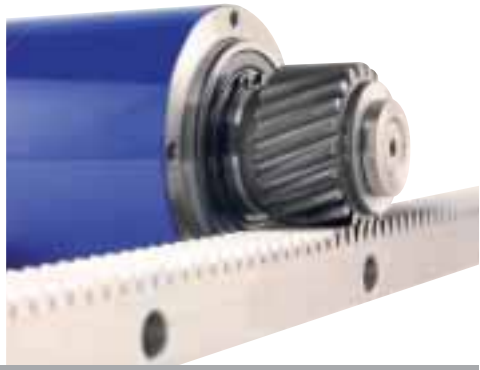

Options

Smooth output shaft (LPK+)
Flanged version (LPBK+)
Food-grade grease
Washdown version

Accessories

Rack / Pinion (see page 294)
Couplings (see page 326)
Belt pulley (PLPB)
Shrink disc (see page 326)
NEMA flange

			1-stage
Ratio	***i***		**1**
Max. acceleration torque (max. 1000 cycles per hour)	T_{2B}	Nm	2.5
		in.lb	22
Nominal output torque (with n_{1N})	T_{2N}	Nm	1.2
		in.lb	11
Emergency stop torque (permitted 1000 times during the service life of the gearhead)	T_{2Not}	Nm	5
		in.lb	44
Nominal input speed (with T_{2N} and 20°C ambient temperature) [a]	n_{1N}	rpm	3200
Max. input speed	n_{1Max}	rpm	5000
Mean no load running torque (with n_1=3000 rpm and 20°C gearhead temperature)	T_{012}	Nm	0.2
		in.lb	
Max. torsional backlash	j_t	arcmin	≤ 25
Torsional rigidity	C_{t21}	Nm/ arcmin	–
		in.lb/ arcmin	
Max. axial force [b]	F_{2AMax}	N	100
		lb_f	23
Max. radial force [b]	F_{2RMax}	N	650
		lb_f	146
Efficiency at full load	η	%	95
Service life (For calculation, see the Chapter “Information”)	L_h	h	> 20000
Weight incl. standard adapter plate	m	kg	0.7
		lb_m	1.5
Operating noise (with n_1=3000 rpm no load)	L_{PA}	dB(A)	–
Max. permitted housing temperature		°C	+90
		F	194
Ambient temperature		°C	-15 to +40
		F	5 to 104
Lubrication			Lubricated for life
Paint			without
Direction of rotation			Motor and gearhead same direction
Protection class			IP 64
Moment of inertia (relates to the drive)	J_1	$kgcm^2$	0.14
		10^{-3} in.lb.s²	0.12

[a] For higher ambient temperatures, please reduce input speed

[b] Refers to center of the output shaft, if n_2 = 1000 rpm

1-stage:

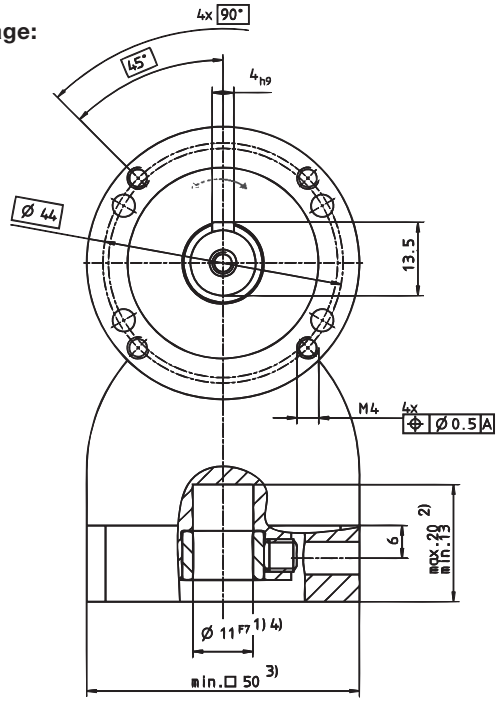

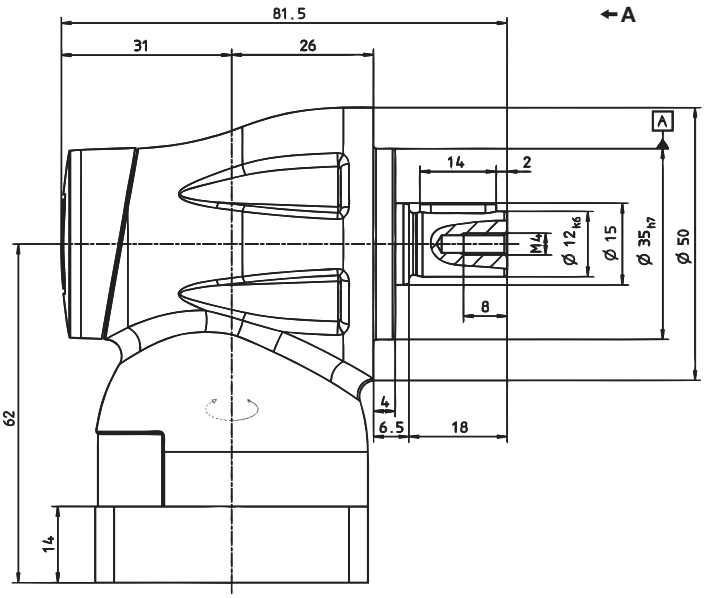

The through bore holes are not intended for attaching components to the machine. Please contact us if you have any questions.

Non-tolerated dimensions ±1 mm

1) Check motor shaft fit.
2) Min./Max. permissible motor shaft length. Longer motor shafts are adaptable, please contact us.
3) The dimensions depend on the motor.
4) Smaller motor shaft diameter is compensated by a bushing.

⚠ Motor mounting according to operating manual



			1-stage
Ratio	***i***		**1**
Max. acceleration torque (max. 1000 cycles per hour)	T_{2B}	Nm	7
		in.lb	62
Nominal output torque (with n_{1N})	T_{2N}	Nm	3.7
		in.lb	33
Emergencye stop torque (permitted 1000 times during the service life of the gearhead)	T_{2Not}	Nm	15
		in.lb	133
Nominal input speed (with T_{2N} and 20°C ambient temperature) [a]	n_{1N}	rpm	3000
Max. input speed	n_{1Max}	rpm	4500
Mean no load running torque (with n_1=3000 rpm and 20°C gearhead temperature)	T_{012}	Nm	0.4
		in.lb	2.7
Max. torsional backlash	j_t	arcmin	≤ 20
Torsional rigidity	C_{t21}	Nm/ arcmin	–
		in.lb/ arcmin	
Max. axial force [b]	F_{2AMax}	N	200
		lb_f	45
Max. radial force [b]	F_{2RMax}	N	1450
		lb_f	326
Efficiency at full load	η	%	95
Service life (For calculation, see the Chapter “Information”)	L_h	h	> 20000
Weight incl. standard adapter plate	*m*	kg	1.9
		lb_m	4.2
Operating noise (with n_1=3000 rpm no load)	L_{PA}	dB(A)	–
Max. permitted housing temperature		°C	+90
		F	194
Ambient temperature		°C	-15 to 40
		F	5 to 104
Lubrication			Lubricated for life
Paint			without
Direction of rotation			Motor and gearhead same direction
Protection class			IP 64
Moment of inertia (relates to the drive)	J_1	$kgcm^2$	0.73
		10^{-3} in.lb.s²	0.65

[a] For higher ambient temperatures, please reduce input speed

[b] Refers to center of the output shaft, if n_2 = 1000 rpm

1-stage:

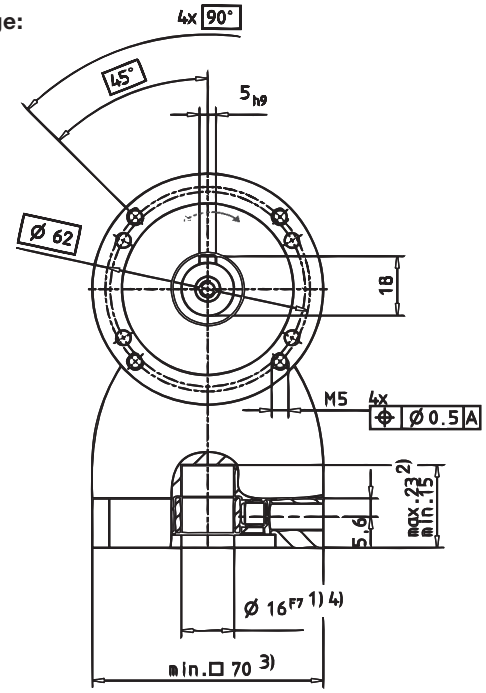

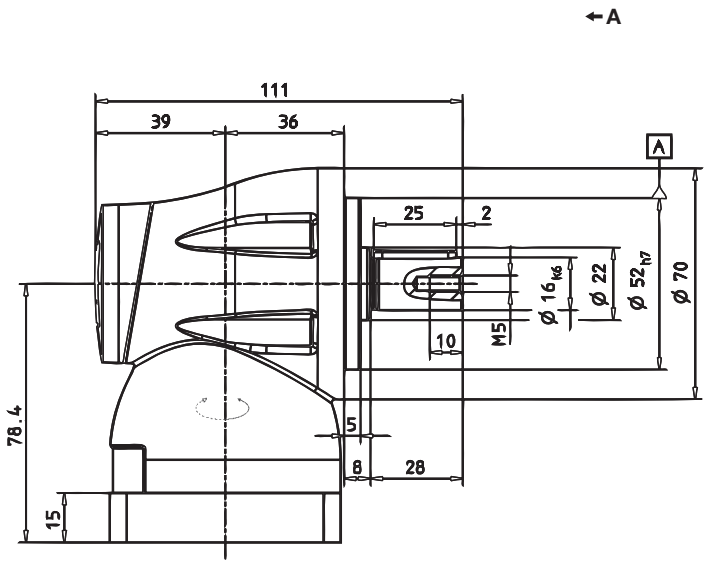

The through bore holes are not intended for attaching components to the machine. Please contact us if you have any questions.

Non-tolerated dimensions ±1 mm

1) Check motor shaft fit.
2) Min./Max. permissible motor shaft length. Longer motor shafts are adaptable, please contact us.
3) The dimensions depend on the motor.
4) Smaller motor shaft diameter is compensated by a bushing.

⚠ Motor mounting according to operating manual

			1-stage
Ratio	***i***		**1**
Max. acceleration torque (max. 1000 cycles per hour)	T_{2B}	Nm	19
		in.lb	168
Nominal output torque (with n_{1N})	T_{2N}	Nm	9.3
		in.lb	82
Emergencye stop torque (permitted 1000 times during the service life of the gearhead)	T_{2Not}	Nm	37
		in.lb	327
Nominal input speed (with T_{2N} and 20°C ambient temperature) [a]	n_{1N}	rpm	2700
Max. input speed	n_{1Max}	rpm	4000
Mean no load running torque (with n_1=3000 rpm and 20°C gearhead temperature)	T_{012}	Nm	0.9
		in.lb	8.0
Max. torsional backlash	j_t	arcmin	≤ 15
Torsional rigidity	C_{t21}	Nm/ arcmin	1.26
		in.lb/ arcmin	11.2
Max. axial force [b]	F_{2AMax}	N	450
		lb_f	101
Max. radial force [b]	F_{2RMax}	N	2400
		lb_f	540
Efficiency at full load	η	%	95
Service life (For calculation, see the Chapter “Information”)	L_h	h	> 20000
Weight incl. standard adapter plate	m	kg	3.2
		lb_m	7.1
Operating noise (with n_1=3000 rpm no load)	L_{PA}	dB(A)	–
Max. permitted housing temperature		°C	+90
		F	194
Ambient temperature		°C	-15 to 40
		F	5 to 104
Lubrication			Lubricated for life
Paint			without
Direction of rotation			Motor and gearhead same direction
Protection class			IP 64
Moment of inertia (relates to the drive)	J_1	$kgcm^2$	3.3
		10^{-3} in.lb.s²	2.9

[a] For higher ambient temperatures, please reduce input speed

[b] Refers to center of the output shaft, if n_2 = 1000 rpm

1-stage:

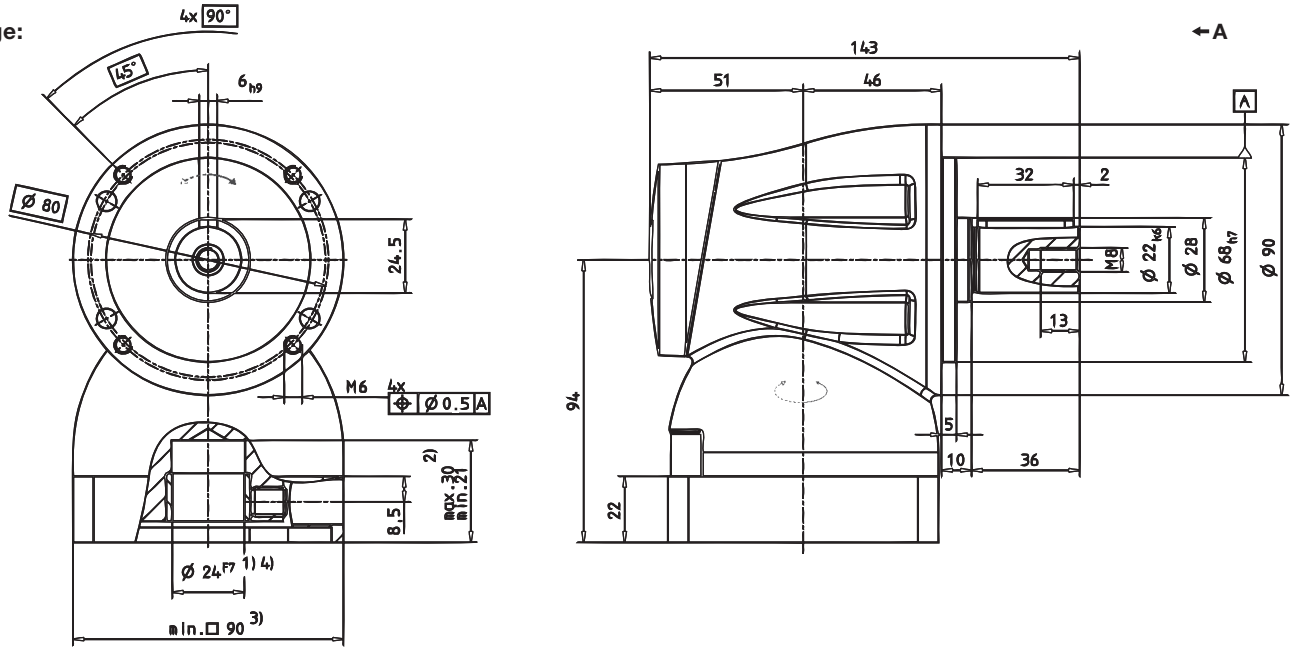

The through bore holes are not intended for attaching components to the machine. Please contact us if you have any questions.

Non-tolerated dimensions ±1 mm

1) Check motor shaft fit.
2) Min./Max. permissible motor shaft length. Longer motor shafts are adaptable, please contact us.
3) The dimensions depend on the motor.
4) Smaller motor shaft diameter is compensated by a bushing.

⚠ Motor mounting according to operating manual

			1-stage
Ratio	***i***		**1**
Max. acceleration torque (max. 1000 cycles per hour)	T_{2B}	Nm	45
		in.lb	398
Nominal output torque (with n_{1N})	T_{2N}	Nm	23
		in.lb	204
Emergency stop torque (permitted 1000 times during the service life of the gearhead)	T_{2Not}	Nm	93
		in.lb	823
Nominal input speed (with T_{2N} and 20°C ambient temperature) [a]	n_{1N}	rpm	2100
Max. input speed	n_{1Max}	rpm	3500
Mean no load running torque (with n_1=3000 rpm and 20°C gearhead temperature)	T_{012}	Nm	2.3
		in.lb	20.4
Max. torsional backlash	j_t	arcmin	≤ 10
Torsional rigidity	C_{t21}	Nm/ arcmin	–
		in.lb/ arcmin	
Max. axial force [b]	F_{2AMax}	N	750
		lb_f	169
Max. radial force [b]	F_{2RMax}	N	4600
		lb_f	1035
Efficiency at full load	η	%	95
Service life (For calculation, see the Chapter “Information”)	L_h	h	> 20000
Weight incl. standard adapter plate	m	kg	8.9
		lb_m	19.7
Operating noise (with n_1=3000 rpm no load)	L_{PA}	dB(A)	–
Max. permitted housing temperature		°C	+90
		F	194
Ambient temperature		°C	-15 to 40
		F	5 to 104
Lubrication			Lubricated for life
Paint			without
Direction of rotation			Motor and gearhead same direction
Protection class			IP 64
Moment of inertia (relates to the drive)	J_1	$kgcm^2$	13.9
		10^{-3} in.lb.s²	12.3

[a] For higher ambient temperatures, please reduce input speed

[b] Refers to center of the output shaft, if n_2 = 1000 rpm

1-stage:

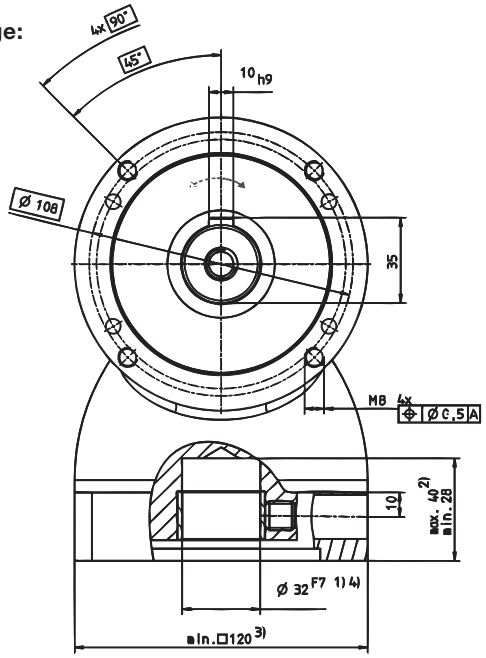

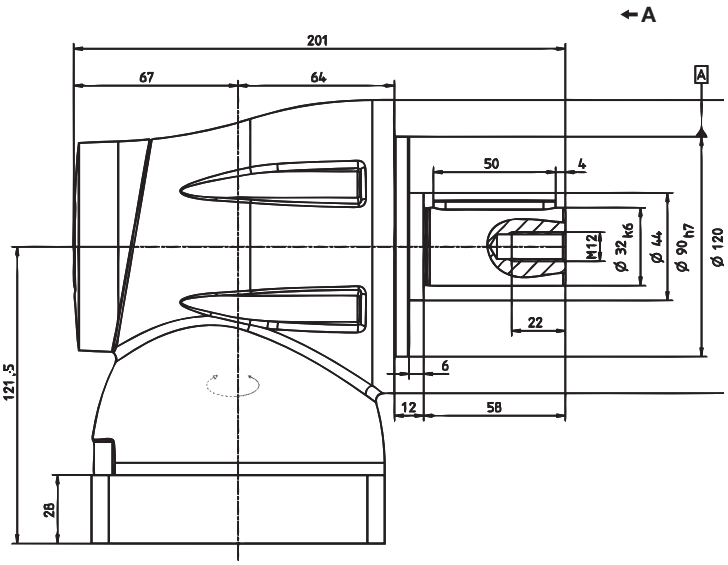

The through bore holes are not intended for attaching components to the machine. Please contact us if you have any questions.

Non-tolerated dimensions ±1 mm

1) Check motor shaft fit.
2) Min./Max. permissible motor shaft length. Longer motor shafts are adaptable, please contact us.
3) The dimensions depend on the motor.
4) Smaller motor shaft diameter is compensated by a bushing.

⚠ Motor mounting according to operating manual



			1-stage
Ratio	***i***		**1**
Max. acceleration torque (max. 1000 cycles per hour)	T_{2B}	Nm	93
		in.lb	823
Nominal output torque (with n_{1N})	T_{2N}	Nm	66
		in.lb	584
Emergency stop torque (permitted 1000 times during the service life of the gearhead)	T_{2Not}	Nm	194
		in.lb	1717
Nominal input speed (with T_{2N} and 20°C ambient temperature) [a]	n_{1N}	rpm	1600
Max. input speed	n_{1Max}	rpm	3000
Mean no load running torque (with n_1=3000 rpm and 20°C gearhead temperature)	T_{012}	Nm	4.5
		in.lb	
Max. torsional backlash	j_t	arcmin	≤ 8
Torsional rigidity	C_{t21}	Nm/ arcmin	–
		in.lb/ arcmin	
Max. axial force [b]	F_{2AMax}	N	1000
		lb_f	225
Max. radial force [b]	F_{2RMax}	N	7500
		lb_f	1688
Efficiency at full load	η	%	95
Service life (For calculation, see the Chapter “Information”)	L_h	h	> 20000
Weight incl. standard adapter plate	m	kg	18.9
		lb_m	42
Operating noise (with n_1=3000 rpm no load)	L_{PA}	dB(A)	–
Max. permitted housing temperature		°C	+90
		F	194
Ambient temperature		°C	-15 to 40
		F	5 to 104
Lubrication			Lubricated for life
Paint			without
Direction of rotation			Motor and gearhead same direction
Protection class			IP 64
Moment of inertia (relates to the drive)	J_1	$kgcm^2$	57.1
		10^{-3} in.lb.s²	50.5

[a] For higher ambient temperatures, please reduce input speed

[b] Refers to center of the output shaft, if n_2 = 1000 rpm

1-stage:

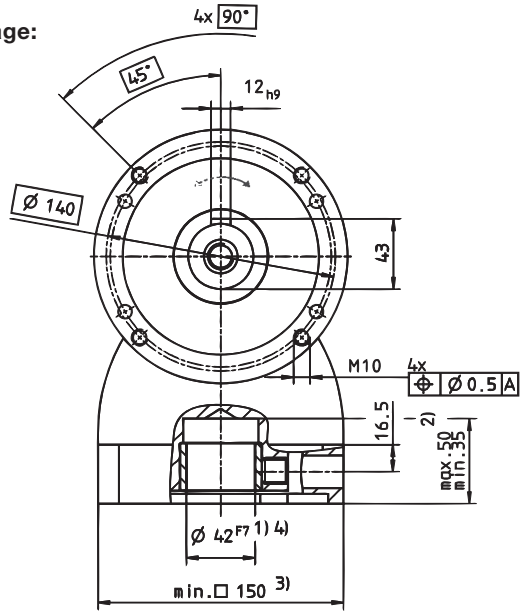

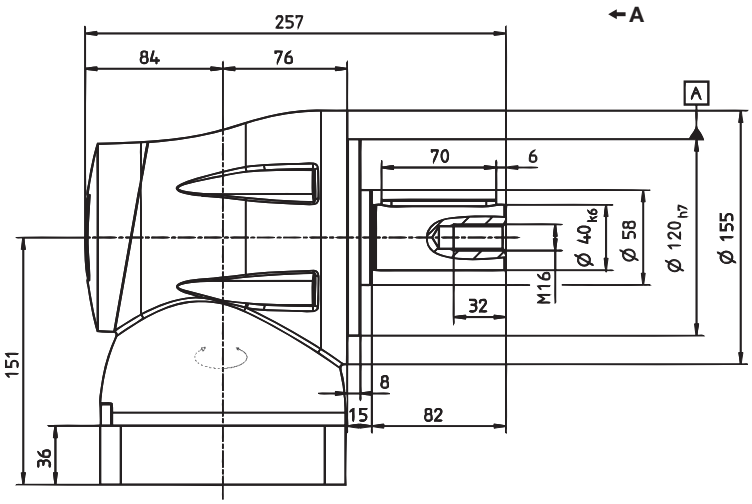

The through bore holes are not intended for attaching components to the machine. Please contact us if you have any questions.

Non-tolerated dimensions ±1 mm

1) Check motor shaft fit.
2) Min./Max. permissible motor shaft length. Longer motor shafts are adaptable, please contact us.
3) The dimensions depend on the motor.
4) Smaller motor shaft diameter is compensated by a bushing.

⚠ Motor mounting according to operating manual

LPK+ 050 2/3-stage

			2-stage				3-stage						
Ratio	***i***		**4**	**5**	**7**	**10**	**16**	**20**	**25**	**35**	**50**	**70**	**100**
Max. acceleration torque (max. 1000 cycles per hour)	T_{2B}	Nm	11	12	12	11	11	11	12	12	12	12	11
		in.lb	97	106	106	97	97	97	106	106	106	106	97
Nominal output torque (with n_{1N})	T_{2N}	Nm	5.2	5.7	5.7	5.2	5.2	5.2	5.7	5.7	5.7	5.7	5.2
		in.lb	46	50	50	46	46	46	50	50	50	50	46
Emergency stop torque (permitted 1000 times during the service life of the gearhead)	T_{2Not}	Nm	26	26	26	26	26	26	26	26	26	26	26
		in.lb	230	230	230	230	230	230	230	230	230	230	230
Nominal input speed (with T_{2N} and 20°C ambient temperature) [a]	n_{1N}	rpm	3200	3200	3200	3200	3200	3200	3200	3200	3200	3200	3200
Max. input speed	n_{1Max}	rpm	5000	5000	5000	5000	5000	5000	5000	5000	5000	5000	5000
Mean no load running torque (with n_1=3000 rpm and 20°C gearhead temperature)	T_{012}	Nm	0.2	0.2	0.2	0.2	0.2	0.2	0.2	0.2	0.2	0.2	0.2
		in.lb	1.77	1.77	1.77	1.77	1.77	1.77	1.77	1.77	1.77	1.77	1.77
Max. torsional backlash	j_t	arcmin	≤ 17	≤ 16	≤ 14	≤ 13	≤ 15						
Torsional rigidity	C_{t21}	Nm/ arcmin	–				–						
		in.lb/ arcmin											
Max. axial force [b]	F_{2AMax}	N	700				700						
		lb_f	158				158						
Max. radial force [b]	F_{2RMax}	N	650				650						
		lb_f	146				146						
Efficiency at full load	η	%	92				90						
Service life (For calculation. see the Chapter “Information”)	L_h	h	> 20000				> 20000						
Weight incl. standard adapter plate	*m*	kg	1.4				1.6						
		lb_m	3.1				3.5						
Operating noise (with n_1=3000 rpm no load)	L_{PA}	dB(A)	–										
Max. permitted housing temperature		°C	+90										
		F	194										
Ambient temperature		°C	-15 to 40										
		F	5 to 104										
Lubrication			Lubricated for life										
Paint			Blue RAL 5002										
Direction of rotation			Motor and gearhead same direction										
Protection class			IP 64										
Moment of inertia (relates to the drive)	J_1	$kgcm^2$	0.156	0.156	0.156	0.156	0.156	0.156	0.156	0.156	0.156	0.156	0.156
		10^{-3} in.lb.s²	0.138	0.138	0.138	0.138	0.138	0.138	0.138	0.138	0.138	0.138	0.138

[a] For higher ambient temperatures, please reduce input speed

[b] Refers to center of the output shaft, if n_2 = 100 rpm

2-stage:

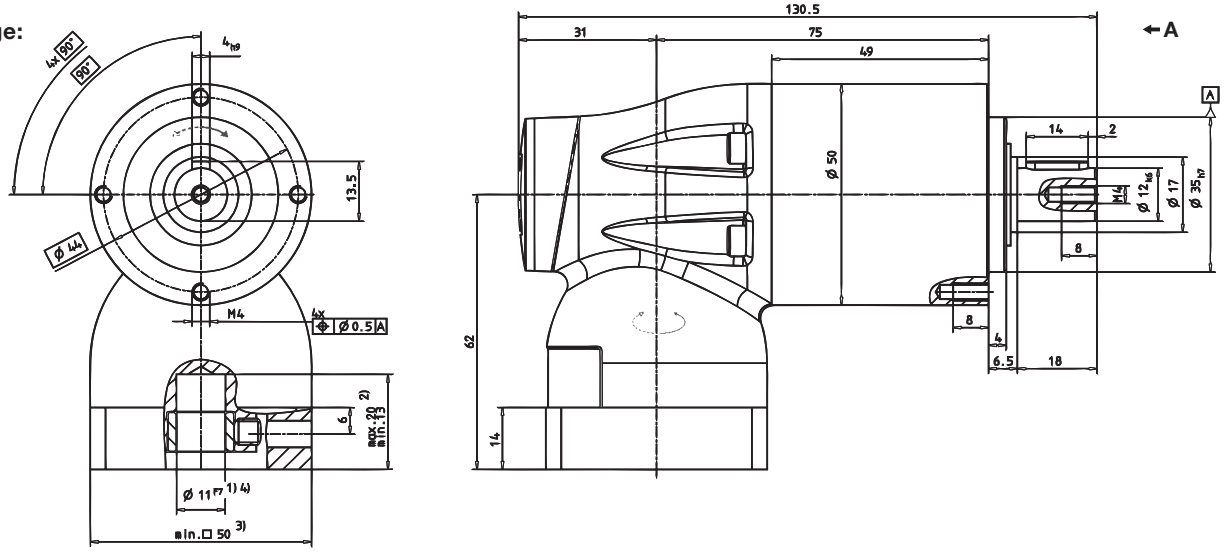

3-stage:

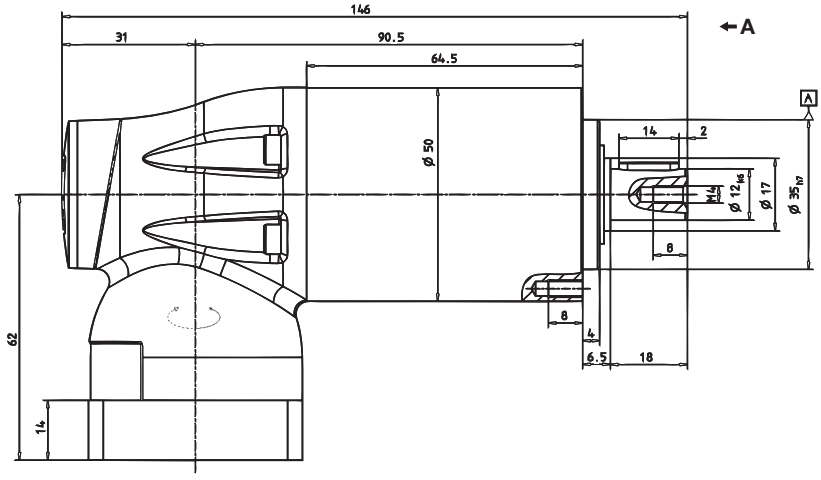

Non-tolerated dimensions ±1 mm

1) Check motor shaft fit.
2) Min./Max. permissible motor shaft length. Longer motor shafts are adaptable, please contact us.
3) The dimensions depend on the motor.
4) Smaller motor shaft diameter is compensated by a bushing.

⚠ Motor mounting according to operating manual

			2-stage					3-stage								
Ratio	***i***		**3**	**4**	**5**	**7**	**10**	**15**	**16**	**20**	**25**	**30**	**35**	**50**	**70**	**100**
Max. acceleration torque (max. 1000 cycles per hour)	T_{2B}	Nm	22	29	35	35	32	32	35	35	35	32	35	35	35	32
		in.lb	195	257	310	310	283	283	310	310	310	283	310	310	310	283
Nominal output torque (with n_{1N})	T_{2N}	Nm	11	15	18	18	16.5	16.5	18	18	18	16.5	18	18	18	16.5
		in.lb	97	133	159	159	146	146	159	159	159	146	159	159	159	146
Emergency stop torque (permitted 1000 times during the service life of the gearhead)	T_{2Not}	Nm	45	60	75	75	75	75	75	75	75	75	75	75	75	75
		in.lb	398	531	664	664	664	664	664	664	664	664	664	664	664	664
Nominal input speed (with T_{2N} and 20°C ambient temperature) [a]	n_{1N}	rpm	3000	3000	3000	3000	3000	3000	3000	3000	3000	3000	3000	3000	3000	3000
Max. input speed	n_{1Max}	rpm	4500	4500	4500	4500	4500	4500	4500	4500	4500	4500	4500	4500	4500	4500
Mean no load running torque (with n_1=3000 rpm and 20°C gearhead temperature)	T_{012}	Nm	0.6	0.55	0.5	0.44	0.44	0.44	0.44	0.44	0.44	0.44	0.44	0.44	0.44	0.4
		in.lb	5.3	4.9	4.4	3.9	3.9	3.9	3.9	3.9	3.9	3.9	3.9	3.9	3.9	3.5
Max. torsional backlash	j_t	arcmin	≤ 15	≤ 14	≤ 13	≤ 11	≤ 11	≤ 12								
Torsional rigidity	C_{t21}	Nm/ arcmin	-	-	2	2	2	3	3	3	3	3	3	3	3	3
		in.lb/ arcmin	-	-	17	21	21	23	27	27	27	25	27	28	28	25
Max. axial force [b]	F_{2AMax}	N	1550					1550								
		lb_f	349					349								
Max. radial force [b]	F_{2RMax}	N	1450					1450								
		lb_f	326					326								
Efficiency at full load	η	%	92					90								
Service life (For calculation, see the Chapter "Information")	L_h	h	> 20000					> 20000								
Weight incl. standardadapter plate	*m*	kg	3.8					4.2								
		lb_m	8.4					9.3								
Operating noise (with n_1=3000 rpm no load)	L_{PA}	dB(A)	–													
Max. permitted housing temperature		°C	+90													
		F	194													
Ambient temperature		°C	-15 to 40													
		F	5 to 104													
Lubrication			Lubricated for life													
Paint			Blue RAL 5002													
Direction of rotation			Motor and gearhead same direction													
Protection class			IP 64													
Moment of inertia (relates to the drive)	J_1	$kgcm^2$	0.85	0.85	0.85	0.85	0.85	0.85	0.85	0.85	0.85	0.85	0.85	0.85	0.85	0.85
		10^{-3} in.lb.s²	0.75	0.75	0.75	0.75	0.75	0.75	0.75	0.75	0.75	0.75	0.75	0.75	0.75	0.75

[a] For higher ambient temperatures, please reduce input speed

[b] Refers to center of the output shaft, if n_2 = 100 rpm

2-stage:

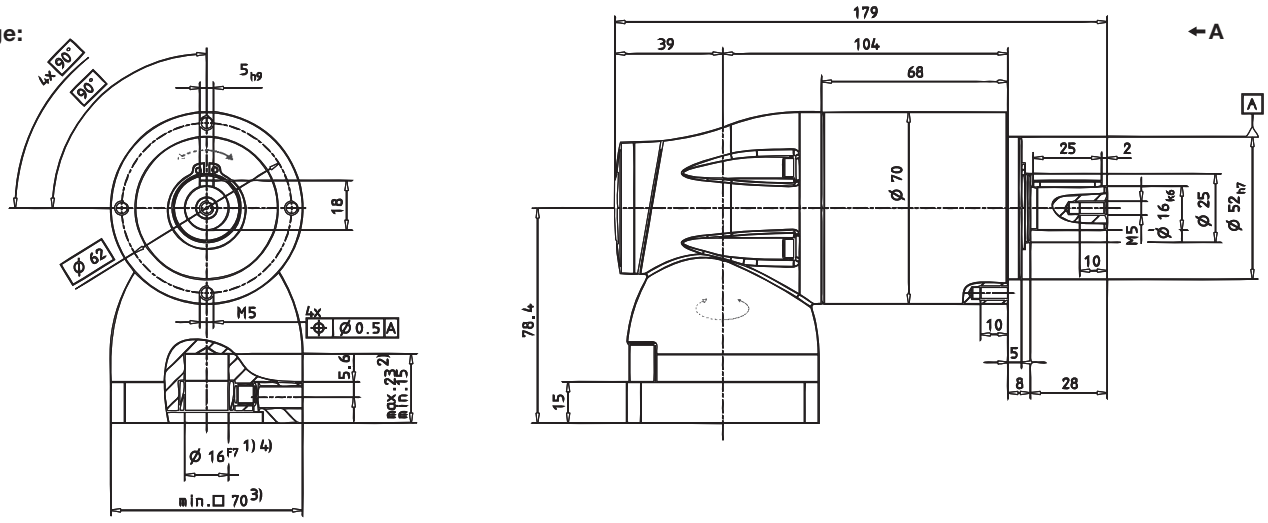

3-stage:

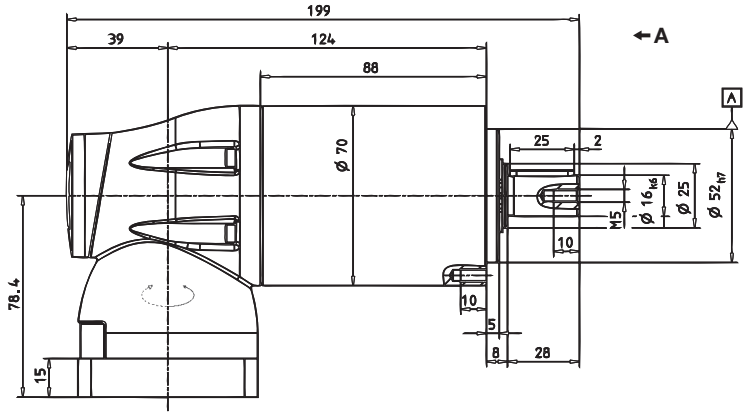

Non-tolerated dimensions ±1 mm

1) Check motor shaft fit.
2) Min./Max. permissible motor shaft length. Longer motor shafts are adaptable, please contact us.
3) The dimensions depend on the motor.
4) Smaller motor shaft diameter is compensated by a bushing.

⚠ Motor mounting according to operating manual

LPK+ 090 2/3-stage

			2-stage					3-stage								
Ratio	i		**3**	**4**	**5**	**7**	**10**	**15**	**16**	**20**	**25**	**30**	**35**	**50**	**70**	**100**
Max. acceleration torque (max. 1000 cycles per hour)	T_{2B}	Nm	56	74	90	90	80	80	90	90	90	80	90	90	90	80
		in.lb	496	655	797	797	708	708	797	797	797	708	797	797	797	708
Nominal output torque (with n_{1N})	T_{2N}	Nm	28	37	45	45	40	40	45	45	45	40	45	45	45	40
		in.lb	248	327	398	398	354	354	398	398	398	354	398	398	398	354
Emergency stop torque (permitted 1000 times during the service life of the gearhead)	T_{2Not}	Nm	110	150	190	190	190	190	190	190	190	190	190	190	190	190
		in.lb	974	1328	1682	1682	1682	1682	1682	1682	1682	1682	1682	1682	1682	1682
Nominal input speed (with T_{2N} and 20°C ambient temperature) [a]	n_{1N}	rpm	2700	2700	2700	2700	2700	2700	2700	2700	2700	2700	2700	2700	2700	2700
Max. input speed	n_{1Max}	rpm	4000	4000	4000	4000	4000	4000	4000	4000	4000	4000	4000	4000	4000	4000
Mean no load running torque (with n_1 = 3000 rpm and 20°C gearhead temperature)	T_{012}	Nm	1.3	1.3	1.2	1.1	1.1	1.1	1.1	1.1	1.1	1.1	1.1	1.1	1.1	1.0
		in.lb	12	11	11	10	10	10	10	10	10	10	10	10	10	9
Max. torsional backlash	j_t	arcmin	≤ 14	≤ 12	≤ 12	≤ 11	≤ 10	≤ 11								
Torsional rigidity	C_{t21}	Nm/ arcmin	4.9	6.5	7.3	8.2	8.0	8.3	9.2	9.4	9.4	8.4	9.5	9.5	9.5	8.5
		in.lb/ arcmin	43	58	65	73	71	73	81	83	83	74	84	84	84	75
Max. axial force [b]	F_{2AMax}	N	1900					1900								
		lb_f	428					428								
Max. radial force [b]	F_{2RMax}	N	2400					2400								
		lb_f	540					540								
Efficiency at full load	η	%	92					90								
Service life (For calculation, see the Chapter "Information")	L_h	h	> 20000					> 20000								
Weight incl. standard adapter plate	m	kg	6.9					7.9								
		lb_m	15.2					17.5								
Operating noise (with n_1 = 3000 rpm no load)	L_{PA}	dB(A)	–													
Max. permitted housing temperature		°C	+90													
		F	194													
Ambient temperature		°C	-15 to 40													
		F	5 to 104													
Lubrication			Lubricated for life													
Paint			Blue RAL 5002													
Direction of rotation			Motor and gearhead same direction													
Protection class			IP 64													
Moment of inertia (relates to the drive)	J_1	$kgcm^2$	4.1	4.1	4.1	4.1	4.1	4.1	4.1	4.1	4.1	4.1	4.1	4.1	4.1	4.1
		10^{-3} in.lb.s²	3.6	3.6	3.6	3.6	3.6	3.6	3.6	3.6	3.6	3.6	3.6	3.6	3.6	3.6

[a] For higher ambient temperatures, please reduce input speed

[b] Refers to center of the output shaft, if n_2 = 100 rpm

2-stage:

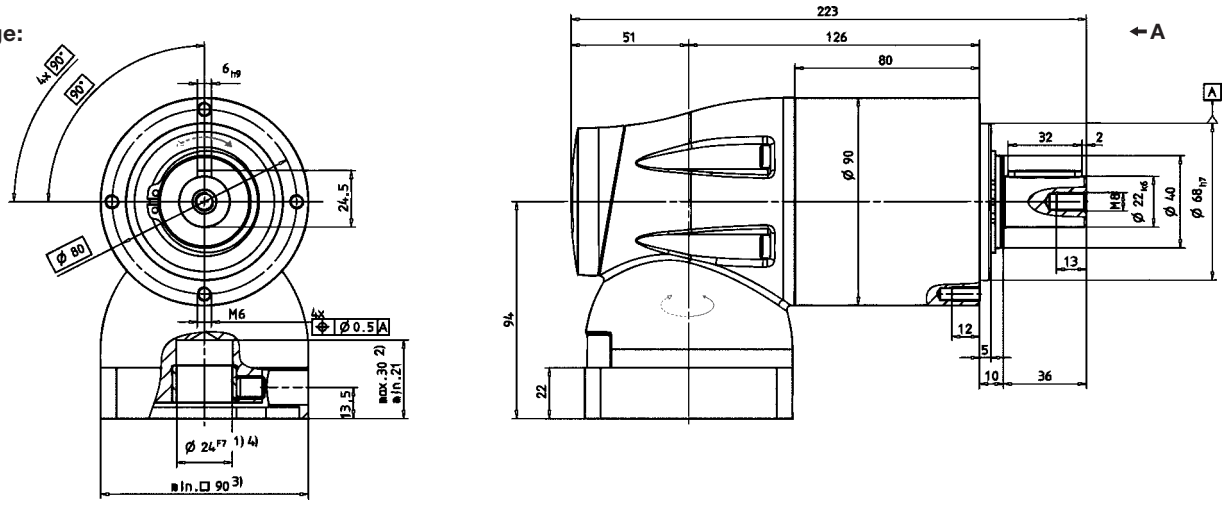

3-stage:

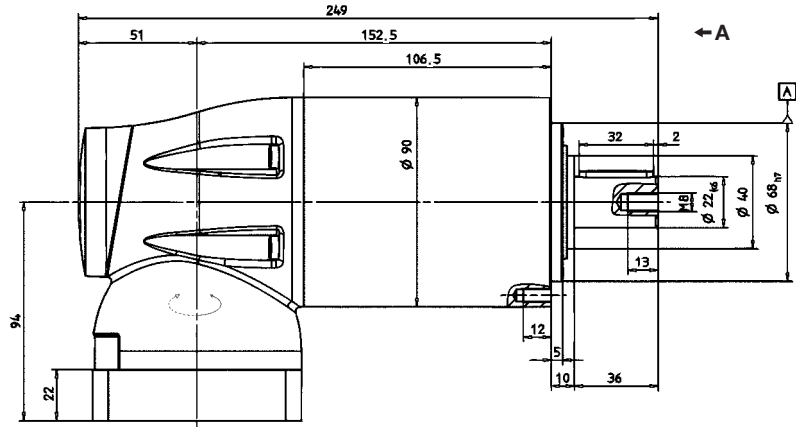

Non-tolerated dimensions ±1 mm

1) Check motor shaft fit.
2) Min./Max. permissible motor shaft length. Longer motor shafts are adaptable, please contact us.
3) The dimensions depend on the motor.
4) Smaller motor shaft diameter is compensated by a bushing.

⚠ Motor mounting according to operating manual

			2-stage					3-stage								
Ratio	***i***		**3**	**4**	**5**	**7**	**10**	**15**	**16**	**20**	**25**	**30**	**35**	**50**	**70**	**100**
Max. acceleration torque (max. 1000 cycles per hour)	T_{2B}	Nm	136	181	220	220	200	200	220	220	220	200	220	220	220	200
		in.lb	1204	1602	1947	1947	1770	1770	1947	1947	1947	1770	1947	1947	1947	1770
Nominal output torque (with n_{1N})	T_{2N}	Nm	68	91	110	110	100	100	110	110	110	100	110	110	110	100
		in.lb	602	805	974	974	885	885	974	974	974	885	974	974	974	885
Emergency stop torque (permitted 1000 times during the service life of the gearhead)	T_{2Not}	Nm	280	380	480	480	480	480	480	480	480	480	480	480	480	480
		in.lb	2478	3363	4248	4248	4248	4248	4248	4248	4248	4248	4248	4248	4248	4248
Nominal input speed (with T_{2N} and 20°C ambient temperature) [a]	n_{1N}	rpm	2100	2100	2100	2100	2100	2100	2100	2100	2100	2100	2100	2100	2100	2100
Max. input speed	n_{1Max}	rpm	3500	3500	3500	3500	3500	3500	3500	3500	3500	3500	3500	3500	3500	3500
Mean no load running torque (with n_1 = 3000 rpm and 20°C gearhead temperature)	T_{012}	Nm	3.5	3.3	3.2	3.1	3.1	2.9	2.9	2.8	2.8	2.7	2.7	2.7	2.7	2.7
		in.lb	31	29	28	27	27	26	26	25	25	24	24	24	24	24
Max. torsional backlash	j_t	arcmin	≤ 12	≤ 11	≤ 11	≤ 10	≤ 10	≤ 11								
Torsional rigidity	C_{t21}	Nm/ arcmin	18.7	21.5	23.3	24.1	21.7	21.8	24.8	24.8	24.9	22.0	25.0	25.0	25.0	22.0
		in.lb/ arcmin	165.5	190.3	206.2	213.3	192.0	192.9	219.5	219.5	220.4	194.7	221.3	221.3	221.3	194.7
Max. axial force [b]	F_{2AMax}	N	4000					4000								
		lb_f	900					900								
Max. radial force [b]	F_{2RMax}	N	4600					4600								
		lb_f	1035					1035								
Efficiency at full load	η	%	92					90								
Service life (For calculation, see the Chapter "Information")	L_h	h	> 20000					> 20000								
Weight incl. standard adapter plate	*m*	kg	16.8					19.2								
		lb_m	37.1					42.4								
Operating noise (with n_1 = 3000 rpm no load)	L_{PA}	dB(A)	–													
Max. permitted housing temperature		°C	+90													
		F	194													
Ambient temperature		°C	-15 to 40													
		F	5 to 104													
Lubrication			Lubricated for life													
Paint			Blue RAL 5002													
Direction of rotation			Motor and gearhead same direction													
Protection class			IP 64													
Moment of inertia (relates to the drive)	J_1	$kgcm^2$	16.6	16.6	16.6	16.6	16.6	16.7	16.7	16.7	16.7	16.7	16.7	16.7	16.7	16.7
		10^{-3} in.lb.s²	14.7	14.7	14.7	14.7	14.7	14.7	14.7	14.7	14.7	14.7	14.7	14.7	14.7	14.7

[a] For higher ambient temperatures, please reduce input speed

[b] Refers to center of the output shaft, if n_2 = 100 rpm

2-stage:

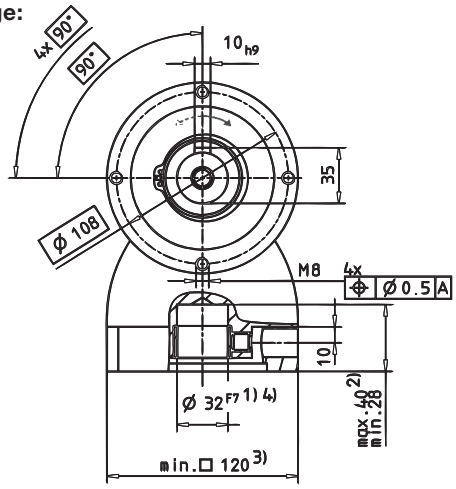

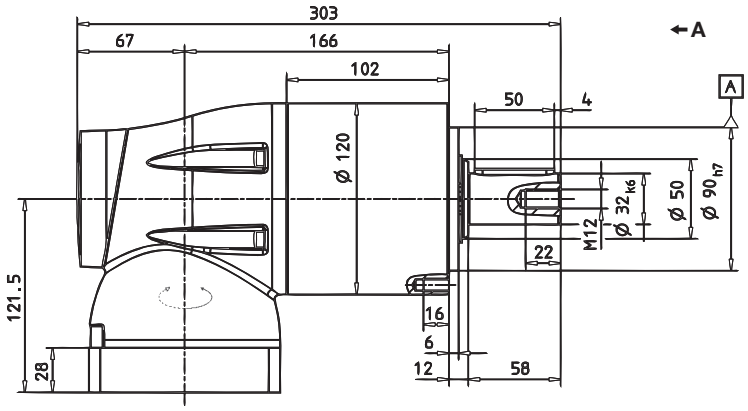

3-stage:

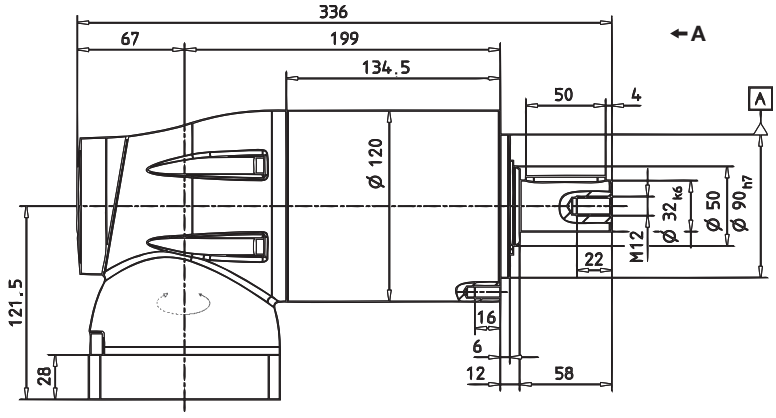

Non-tolerated dimensions ±1 mm

1) Check motor shaft fit.
2) Min./Max. permissible motor shaft length. Longer motor shafts are adaptable, please contact us.
3) The dimensions depend on the motor.
4) Smaller motor shaft diameter is compensated by a bushing.

⚠ Motor mounting according to operating manual

			2-stage		3-stage		
Ratio	***i***		**5**	**10**	**25**	**50**	**100**
Max. acceleration torque (max. 1000 cycles per hour)	T_{2B}	Nm	450	350	450	450	350
		in.lb	3983	3098	3983	3983	3098
Nominal output torque (with n_{1N})	T_{2N}	Nm	320	190	320	320	190
		in.lb	2832	1682	2832	2832	1682
Emergency stop torque (permitted 1000 times during the service life of the gearhead)	T_{2Not}	Nm	1000	1000	1000	1000	1000
		in.lb	8850	8850	8850	8850	8850
Nominal input speed (with T_{2N} and 20°C ambient temperature) [a]	n_{1N}	rpm	1600	1600	1600	1600	1600
Max. input speed	n_{1Max}	rpm	3000	3000	3500	3500	3500
Mean no load running torque (with n_1 = 3000 rpm and 20°C gearhead temperature)	T_{012}	Nm	–	–	–	–	–
		in.lb					
Max. torsional backlash	j_t	arcmin	≤ 10	≤ 9	≤ 11		
Torsional rigidity	C_{t21}	Nm/ arcmin	44.2	41.9	54.5	54.9	44
		in.lb/ arcmin	391	371	482	486	389
Max. axial force [b]	F_{2AMax}	N	6000		6000		
		lb_f	1350		1350		
Max. radial force [b]	F_{2RMax}	N	7500		7500		
		lb_f	1688		1688		
Efficiency at full load	η	%	92		90		
Service life (For calculation, see the Chapter "Information")	L_h	h	> 20000		> 20000		
Weight incl. standard adapter plate	*m*	kg	34.7		38.7		
		lb_m	76.7		85.5		
Operating noise (with n_1 = 3000 rpm no load)	L_{PA}	dB(A)	–				
Max. permitted housing temperature		°C	+90				
		F	194				
Ambient temperature		°C	-15 to 40				
		F	5 to 104				
Lubrication			Lubricated for life				
Paint			Blue RAL 5002				
Direction of rotation			Motor and gearhead same direction				
Protection class			IP 64				
Moment of inertia (relates to the drive)	J_1	$kgcm^2$	75.1	75.1	16.8	16.8	16.8
		10^{-3} in.lb.s²	66.5	66.5	14.8	14.8	14.8

[a] For higher ambient temperatures, please reduce input speed
[b] Refers to center of the output shaft, if = 100 rpm

2-stage:

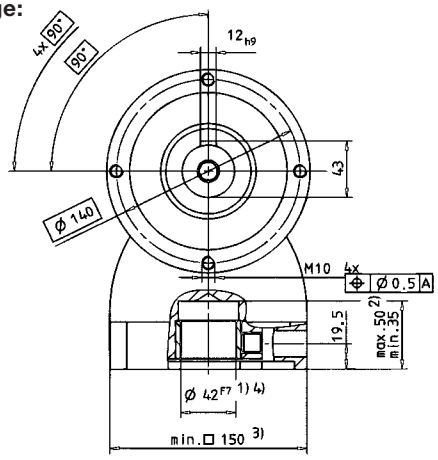

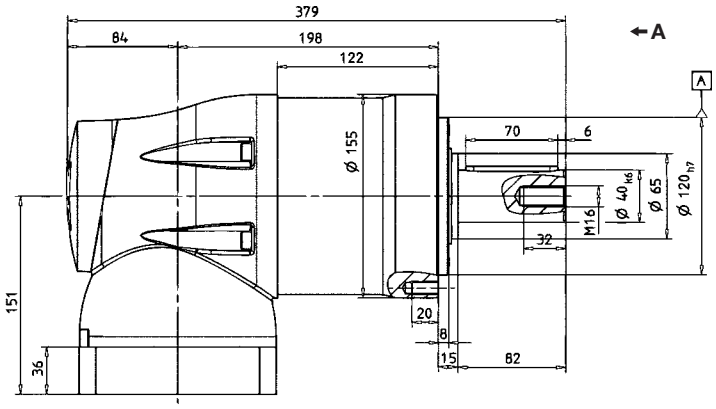

3-stage:

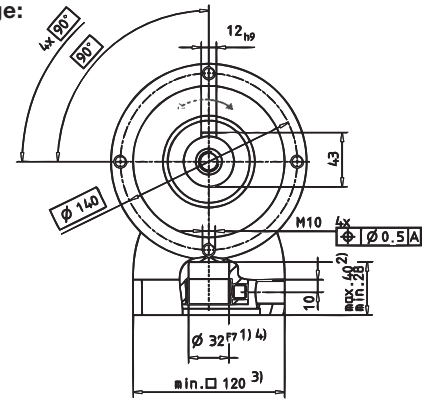

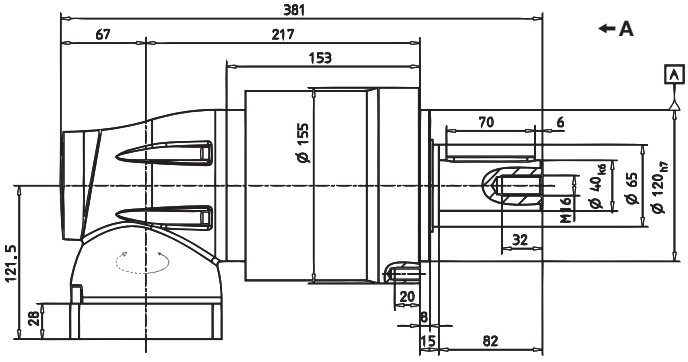

Non-tolerated dimensions ±1 mm

1) Check motor shaft fit.
2) Min./Max. permissible motor shaft length. Longer motor shafts are adaptable, please contact us.
3) The dimensions depend on the motor.
4) Smaller motor shaft diameter is compensated by a bushing.

⚠ Motor mounting according to operating manual