WITTENSTEIN | alpha

LK+/LPK+

Operating Manual



2022-D026817

Revision: 01a

Revision history

Revision	Date	Comment	Chapter
1	24.05.07	New version	All
1a	11.02.09	WITTENSTEIN Layout	All

Service

In case you have technical questions,
please contact:

WITTENSTEIN alpha GmbH

Customer Service
Walter-Wittenstein-Straße 1
D-97999 Igersheim

Tel.: +49 7931 493-10900

Fax: +49 7931 493-10903

E-mail: service-alpha@wittenstein.de

© **WITTENSTEIN alpha GmbH 2008**

This documentation is copyright protected.

WITTENSTEIN alpha GmbH reserves all the rights to photo-mechanical reproduction, copying, and the distribution by special processes (such as computers, file media, data networks), even in parts.

Subject to technical and content changes without notice.

Contents

1 On this manual 2
1.1 Signal words 2
1.2 Safety symbols 2
1.3 Information symbols 3
2 Safety 4
2.1 EC – Machinery directive 4
2.2 Dangers 4
2.3 Personnel 4
2.4 Intended use 4
2.5 Guarantee and Liability 4
2.6 General safety instructions 5
3 Description of the gearhead 6
3.1 General information 6
3.2 Type plate 6
3.3 Ordering code 7
3.4 Performance statistics 7
3.5 Weight 7
4 Transport and storage 8
4.1 Scope of delivery 8
4.2 Packaging 8
4.3 Transport 8
4.4 Storage 8
5 Assembly 9
5.1 Preparations 9
5.2 Mounting the motor to the gearhead 10
5.3 Mounting the gearhead onto a machine 11
5.4 Mounting on the gear output side 11
6 Startup and operation 12
7 Maintenance and disposal 13
7.1 Maintenance work 13
7.1.1 Visual inspection 13
7.1.2 Checking the tightening torques 13
7.2 Startup after maintenance work 13
7.3 Maintenance schedule 13
7.4 Notes on the lubricant used 14
7.5 Supplementary information 14
8 Malfunctions 15
9 Appendix 16
9.1 Information on mounting onto a motor 16
9.2 Information on mounting onto a machine 16
9.3 Tightening torques for common thread sizes in general mechanics 17

1 On this manual

This operating manual contains necessary information for the safe operation of the right-angle gearhead LK+/LPK+, referred to as gearhead in the following.

The operator must make sure that this operating manual is read through by all persons assigned to install, operate, or maintain the gearhead, and that they understand it.

Store the operating manual within reach near the gearhead.

1.1 Signal words

The following signal words are used to bring your attention to dangers, prohibitions, and important information:

	DANGER **This signal word points out to an immanent danger that can cause serious injuries and even death.**
	WARNING **This signal word points out to a possible danger that can cause serious injuries and even death.**
	CAUTION **This signal word points out to a possible danger that can cause slight to serious injuries.**
	CAUTION **This signal word (without warning symbol) points out to a possible danger that can cause material damage.**
	INFORMATION **This signal word draws your attention to application tips or especially important information when handling the gearhead.**

1.2 Safety symbols

The following safety symbols are used to bring your attention to dangers, prohibitions, and important information:


General danger


Hot surface


Suspended loads


Danger of pull-in


Environment protection


Information

1.3 Information symbols

The following information symbols are used:

- requires you to carry out an action
  - ➲ indicates the results of an action

ⓘ provides additional information on handling

2 Safety

This operating manual, especially the safety instructions and the rules and regulations valid for the operating site, must be observed by all persons working with the gearhead.

In addition to the safety specifications mentioned in the operating manual, the general and also the local regulations on the prevention of accidents and on environmental protection should be observed.

2.1 EC – Machinery directive

Within terms of the EC - machinery directive 2006/42/EC, the gearhead is not considered as an autonomous machine, but as a “component to install in machines”.

Operation is prohibited within the area of validity of the EC directive until it has been determined that the machine in which this gearhead is installed corresponds to the regulations within this directive.

2.2 Dangers

The gearhead has been constructed according to current technological standards and accepted safety regulations. To avoid danger to the operator or damage to the machine, the gearhead may be put to use only for its intended usage (see chapter 2.4 "Intended use") and in a technically flawless and safe state.

2.3 Personnel

Only persons who have read and understood this operating manual may carry out work on the gearhead.

2.4 Intended use

The gearhead is suitable for all industrial applications that do not come under article 2 of the EC directive 2002/95/EC (usage restriction of certain dangerous materials in electrical and electronic equipment).

The gearhead is specified for installment on motors that:

- correspond to the design B5 (for any divergences, please consult our Customer Service Department [Technical Customer Service]).
- show a radial and axial runout tolerance of at least “N” according to DIN 42955 and
- have a smooth shaft.

2.5 Guarantee and Liability

Guarantee and liability claims are excluded for personal injury and material damage if the claims derive from one or more of the following causes:

- improper use
- improper assembly/disassembly or improper operation
- operation of the gearhead when safety devices and equipment are defective
- operation of a heavily soiled gearhead
- non-observance of information on transport and storage
- modifications or reconstructions that have been carried out without the written authorisation of alpha getriebebau GmbH
- improper or neglected maintenance and repair

2.6 General safety instructions



⚠ WARNING

Objects flung out by rotating components can cause serious injuries.

- Remove objects and tools from the gearhead before putting it into operation.



⚠ WARNING

Rotating components on the gearhead can pull in parts of the body and cause serious injuries and even death.

- Keep a sufficient distance to rotating machinery while the gearhead is running.



⚠ CAUTION

Hot gearhead housing can cause serious burns.

- Touch the gearhead housing only when wearing protective gloves or after the gearhead has been idle for some time.



INFORMATION

Solvents can pollute soil and water.

- Use and dispose of cleaning solvents appropriately.

3 Description of the gearhead

3.1 General information

The gearhead is a single- or multistage, low-backlash right angle gearhead that is manufactured standard in the «M» version (motor attachment). The output shaft bearing is designed to absorb high tilting moments and axial forces.

The motor is centred using the clamping hub and not with the adapter plate. The motor can thus be mounted without radial distortion.

It can be adapted to various motors using an adapter plate and a spacer sleeve.

3.2 Type plate

The identification plate is attached to the gearhead housing.

		Designation
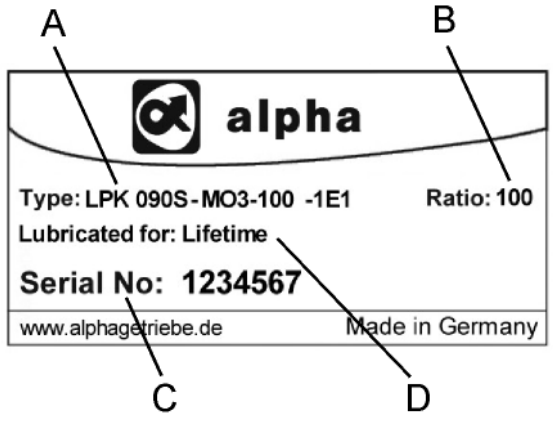	A	Ordering code (see Chapter 3.3 «Ordering code»)
	B	Ratio
	C	Serial number
	D	Lubrication note

Tbl-1: Type plate (example)

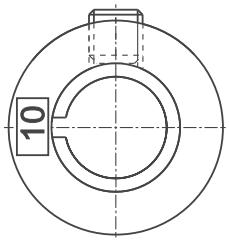

The ratio (e.g. i = 10) can also be found on a label on the plug socket. The spacer sleeve is properly aligned when the slit points to the label.

3.3 Ordering code

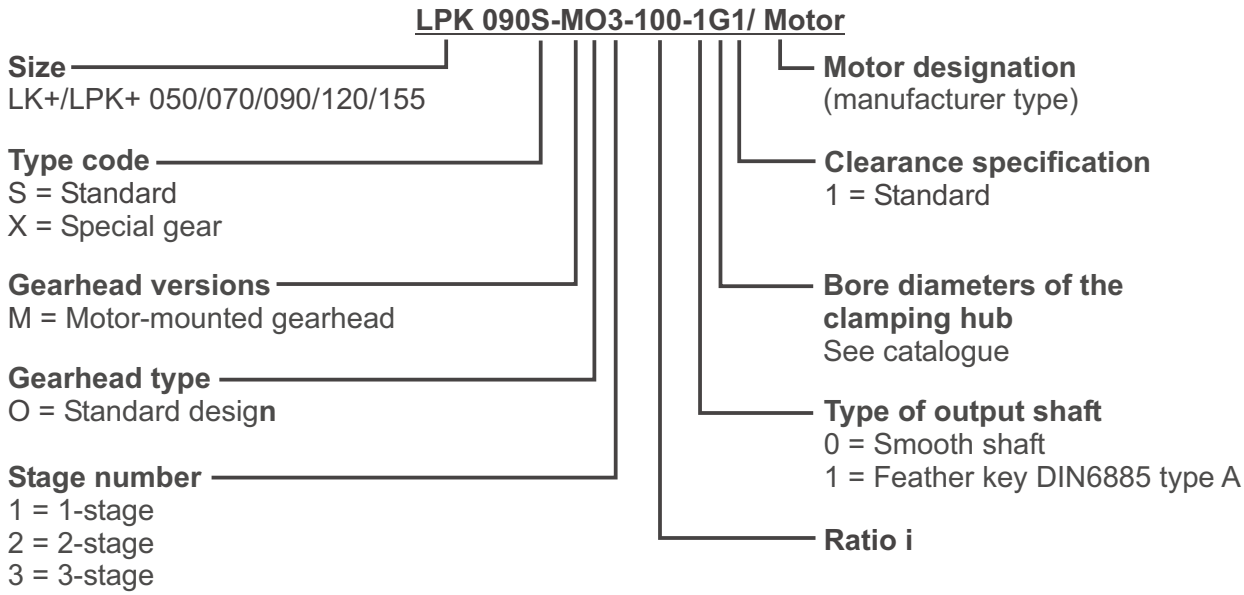

3.4 Performance statistics

Please refer to our catalogue or our Internet page at http://www.alphagetriebe.de for the maximum permitted speeds and torques.

INFORMATION

Please consult our service department if your gearhead is older than a year. You will then receive the valid performance data.

3.5 Weight

You will find the weights of the gearhead with medium-sized adapter plate in Table "Tbl-2". If another adapter plate is mounted, the actual weight can deviate by up to 10%.

Gearhead size LK+	050	070	090	120	155
1–stage [kg]	0,7	1,9	3,2	8,9	18,9
Gearhead size LPK+	**050**	**070**	**090**	**120**	**155**
2–stage [kg]	1,4	3,8	6,9	16,8	34,7
3–stage [kg]	1,6	4,2	7,9	19,2	38,7

Tbl-2: Weight

4 Transport and storage

4.1 Scope of delivery

- Check the completeness of the delivery against the delivery note.

ⓘ Missing parts or damage must be notified immediately in writing to the carrier the insurance, or **alpha getriebebau GmbH**.

4.2 Packaging

The gearhead is delivered packed in foil and cardboard boxes.

- Dispose of the packaging materials at the recycling sites intended for this purpose. Observe the locally valid regulations for disposals.

4.3 Transport



CAUTION

Impacts caused for instance by dropping or setting down too quickly may damage the gearhead.

- Use only hoisting equipment and transportation devices with sufficient capacity.
- The permitted lifting weight of a hoist may not be exceeded.
- Lower the gearhead slowly.



⚠ WARNING

Suspended loads may fall and cause serious injuries and even death.

- Do not stand under suspended loads.



⚠ WARNING

The plastic lid on the gearhead may come off.

- Never transport the gearhead by the plastic lid.

No special transport mode is prescribed to transport the gearhead.

For specifications on the weights see Chapter 3.5 "Weights".

4.4 Storage

Store the gearhead in horizontal position and dry surroundings at a temperature of 0 °C to +30 °C in the original packaging. Store the gearhead for a maximum of 2 years.

For storage logistics we recommend the “first in – first out” principle.

5 Assembly



CAUTION

Loose or overloaded screw connections can damage the gearhead.

- Use a calibrated torque wrench to tighten and check all screw connections for which a tightening torque has been specified.



CAUTION

Intensive distortions when assembling the motor (e.g. for motors with shaft shoulder, extensive chamfer radius or longer shafts than permitted for the gearhead) can damage the gearhead and the motor.

- Check the interfering edges by measuring, or by a measurement check based on our catalogue specifications and the information of the motor manufacturer.
- Contact our Customer Service Department.

5.1 Preparations



CAUTION

Pressurised air can damage the sealing of the gearhead.

- Do not use pressurised air to clean the gearhead.

- Clean / de-grease the following gearhead components with a clean and lint-free cloth and a fat dissolving but non-aggressive cleanser:
  - all fitting surfaces to neighbouring components
  - centring
  - the motor shaft
  - the inner diameter of the plug receptacle
  - the spacer sleeve inside and outside
- Check the fitting surface also for damages and impurities.

5.2 Mounting the motor to the gearhead

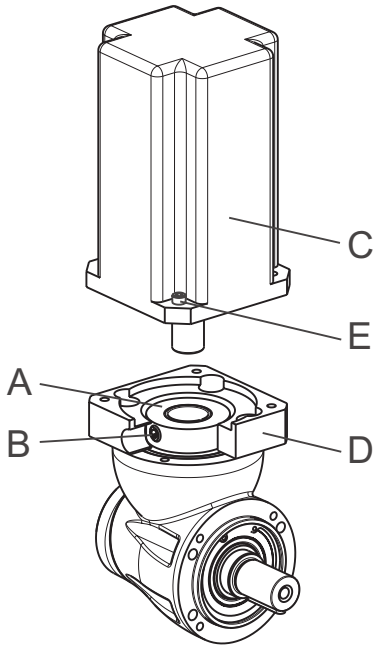

- If the motor shaft has a feather key, remove it.
  - ⓘ If recommended by the manufacturer, apply a half wedge.
- Turn the plug receptacle (A) so that the threaded pin (B) can be reached through the mounting holes.
- Push the motor shaft into the socket of the gearhead.
  - ⓘ The motor shaft needs to slide in easily. If this is not the case, then the threaded pin needs to be loosened some more.
  - ⓘ The slot of the spacer sleeve has to be aligned with the groove (if existing) of the motor shaft and be turned by 90° towards the threaded pin, see table "Tbl-3".
  - ⓘ There may be no gap between the motor (C) and the adapter plate (D).

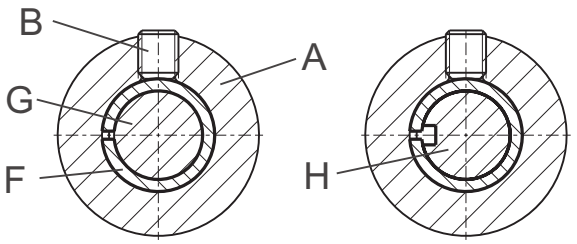

	Designation
A	Plug receptacle
B	Threaded pin
F	Spacer sleeve
G	Smooth shaft
H	Grooved shaft

Tbl-3: Arrangement of motor shaft, socket and spacer sleeve

- Smear screw-bonding agent (for example Loctite 243) onto the four bolts (E).
- Attach the motor (C) to the adapter plate (D) using the four screws (E).
- Tighten the threaded pin (B) of the socket (A).
  - ⓘ For screw sizes, prescribed tightening torques and maximum axial force, refer to Chapter 9.1 «Specifications for mounting onto a motor», table "Tbl-7".
- Press the enclosed stopper plugs up to the stop of the stopper plug in the mounting bores of the adapter plate (D).

5.3 Mounting the gearhead onto a machine

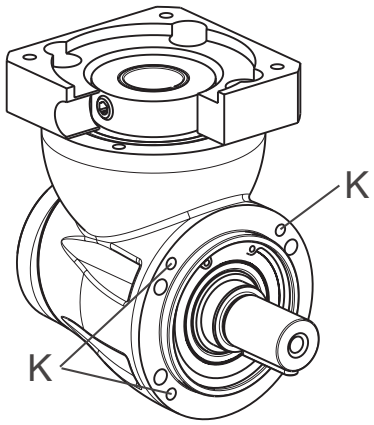

- Smear screw-bonding agent (for example Loctite 243) onto the fastening bolts.
- Mount the gearhead using the fastening bolts to the machine **only** by the threaded bores (K).
  - ⓘ Mount the gearhead in such a way that the type plate remains legible.
  - ⓘ Do not use washers (e.g. plain washers, tooth lock washers).
  - ⓘ For prescribed screw sizes and tightening torques, refer to Chapter 9.2 «Specifications for mounting onto a machine «, tables «Tbl-8» and «Tbl-9».

5.4 Mounting on the gear output side

CAUTION

Distortions during mounting operations can damage the gearhead.

- Mount gearwheels and toothed belt pulleys onto the output shaft without forcing.
- Do not on any account attempt an assembly by force or hammering.
- Only use suitable tools and equipment for the assembly.
- When shrink-fitting or pulling on a gear onto the output shaft make sure that the maximum static axial forces of the output bearing (table «Tbl-4») are not exceeded.

Gearhead size LK+	**050**	**070**	**090**	**120**	**155**
F_{2AMAX} [N]	100	200	450	750	1000
Gearhead size LPK+	**050**	**070**	**090**	**120**	**155**
F_{2AMAX} [N]	700	1550	1900	4000	6000

Tbl-4: Maximum permitted static axial forces at static load rating (s0) = 1.8 and radial force (FR) = 0

6 Startup and operation



⚠ WARNING

Objects flung out by rotating components can cause serious injuries.

- Remove objects and tools from the gearhead before putting it into operation.



⚠ WARNING

Rotating components on the gearhead can pull in parts of the body and cause serious injuries and even death.

- Keep a sufficient distance to rotating machinery while the gearhead is running.



⚠ CAUTION

Hot gearhead housing can cause serious burns.

- Touch the gearhead housing only when wearing protective gloves or after the gearhead has been idle for some time.

Operational conditions and requirements for the surroundings:

- Because of the factory-filled lubricant, the ambient temperature may not lie under 0 °C, or over +40 °C. Operating temperature may not exceed +90 °C.

  ⓘ For other conditions of use, please consult our Customer Service Department.
- Only use the gearhead up to its maximum limit values, see chapter 3.5 “Performance statistics”.
- Only use the gearhead in a clean, dust-free and dry environment.

7 Maintenance and disposal



⚠ CAUTION

Hot gearhead housing can cause serious burns.

- Touch the gearhead housing only when wearing protective gloves or after the gearhead has been idle for some time.



⚠ WARNING

Rotating components on the gearhead can pull in parts of the body and cause serious injuries and even death.

- Disconnect the machine from the mains before starting maintenance work.
- Secure the motor against restarting during maintenance work.

7.1 Maintenance work

7.1.1 Visual inspection

- Check the entire gearhead for exterior damage.
- The radial shaft seals are subject to wear. Therefore also check the gearhead for leakage during each visual inspection.
  - ⓘ You can find more general information on radial shaft seals on our partner's Internet site at http://www.simrit.de.
  - ⓘ Check the mounting position, so that no foreign medium (e.g. oil) has collected on the output shaft.

7.1.2 Checking the tightening torques

- Check the tightening torque of the fastening bolts on the gear unit housing.
  - ⓘ For prescribed tightening torques, refer to Chapter 9.2 «Specifications for mounting onto a machine « tables "Tbl-8" and "Tbl-9".
- Check the tightening torque of the threaded pin on the motor attachment.
  - ⓘ For prescribed tightening torques, refer to Chapter «Specifications for mounting onto a motor», table «Tbl-7».

7.2 Startup after maintenance work

- Clean the outside of the gearhead.
- Assemble all safety devices.
- Do a trial run before releasing the gearhead again for operation.

7.3 Maintenance schedule

Maintenance work	At start-up	After 500 operating hours or 3 months	Every 3 months	Yearly
Visual inspection	X	X	X	
Checking the tightening torques	X	X		X

Tbl-5: Maintenance schedule

7.4 Notes on the lubricant used



INFORMATION

All gearheads are lubricated for their entire working life.

You can obtain further information on the lubricant from our Customer Service.

7.5 Supplementary information

Consult our Customer Service Department for supplementary information on exchanging the adaptor plate, on disassembly and on disposal of the gearhead.

- Dispose of the gearhead at the recycling sites intended for this purpose.
  ⓘ Observe the locally valid regulations for disposal.

8 Malfunctions



CAUTION

Changed operational behaviour can be an indication of existing damage to the gearhead, or cause damage to the gearhead.

- Do not put the gearhead back into operation until the cause of the malfunction has been rectified.

Fault	Possible cause	Solution
Increased operating temperature	The gearhead is not suited for the task.	Check the technical specifications.
	Motor is heating the gearhead.	Check the wiring of the motor.
		Ensure adequate cooling.
		Change the motor.
	Ambient temperature too high.	Ensure adequate cooling.
Increased noise during operation	Distortion in motor mounting.	Please consult our Customer Service Department.
	Damaged bearings.	
	Damaged gear teeth.	
Loss of lubricant	Lubricant quantity too high.	Wipe off discharged lubricant and continue to watch the gearhead. Lubricant discharge must stop after a short time.
	Seals not tight.	Please consult our Customer Service Department.

Tbl-6: Malfunctions

9 Appendix

9.1 Information on mounting onto a motor

Gearhead size LK+/LPK+	Width across flats [mm]	Tightening torque [Nm]	Max. axial force [N]
050	3	5,6	45
070	4	9,5	80
090	5	23	100
120	6	45	150
155, 1–stage	8	78	180
155, 2–stage	6	45	150

Tbl-7: Information on mounting onto a motor

9.2 Information on mounting onto a machine

	Gearhead size LK+	Bore Ø [mm]	Screw size / property class	Tightening torque [Nm]
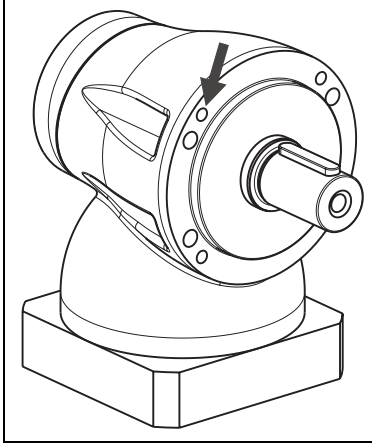	**050**	44	M4 / 8.8	2,8
	070	62	M5 / 8.8	5,6
	090	80	M6 / 8.8	9,5
	120	108	M8 / 8.8	23
	155	140	M10 / 8.8	45

Tbl-8: Threaded bores in the gear unit housing LK+

	Gearhead size LPK+	Bore Ø [mm]	Screw size / property class	Tightening torque [Nm]
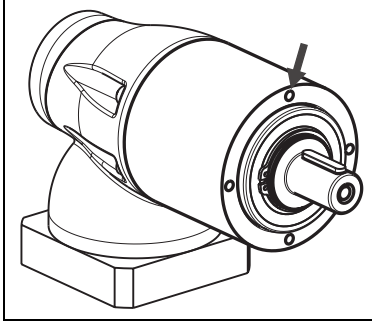	**050**	44	M4 / 12.9	4,95
	070	62	M5 / 12.9	9,7
	090	80	M6 / 12.9	16,5
	120	108	M8 / 12.9	40
	155	140	M10 / 12.9	81

Tbl-9: Threaded bores in the gear unit housing LPK+

9.3 Tightening torques for common thread sizes in general mechanics

	Tightening torques [Nm] for threads												
Property class	**M3**	**M4**	**M5**	**M6**	**M8**	**M10**	**M12**	**M14**	**M16**	**M18**	**M20**	**M22**	**M24**
8.8	1,28	2,9	5,75	9,9	24	48	83	132	200	275	390	530	675
10.9	1,8	4,1	8,1	14	34	67	117	185	285	390	550	745	950
12.9	2,15	4,95	9,7	16,5	40	81	140	220	340	470	660	890	1140

Tbl-10: Tightening torques for common thread sizes

WITTENSTEIN alpha GmbH
Walter-Wittenstein-Straße 1
97999 Igersheim

WITTENSTEIN - being one with the future

www.wittenstein.de