P13 PowerStation

User Guide



February 2008

Parker Electromechanical
50 W. TechneCenter Drive, Milford, Ohio 45150

Part #: 88-026287-01

Copyright and Trademark Notice

Copyright © 2008 by Parker Electromechanical. All rights reserved. No part of this publication may be reproduced, transmitted, transcribed, stored in a retrieval system, in any form or by any means, mechanical, photocopying, recording or otherwise, without the prior written consent of Parker Electromechanical.

While every precaution has been taken in the preparation of this manual, Parker Electromechanical and the author assume no responsibility for errors or omissions. Neither is any liability assumed for damages resulting from the use of the information contained herein. All product and company names are trademarks of their respective companies and licenses.

The following products are copyright their respective owners: Microsoft, Datalight, Intel, SanDisk, and SanDisk ImageMate.

Product Warranty Information

Parker Electromechanical provides top quality products through rigid testing and the highest quality control standards. However, should a problem occur with your hardware or with the software protection key, Parker's standard product warranty covers these items for 24 months from the date of shipment from Parker. Exceptions appear below:

- PowerStation backlight bulbs have a 90-day warranty.
- Third-party products, such as bus cards, carry the manufacturer's specified warranty.
- For all displays, image retention (burn-in) is not covered by warranty.
- Software revisions that occur within 60 days after purchase are available under warranty upon request. Please review the Interact License Agreement for additional software warranty information.

Should you have any questions about your application or need technical assistance, please call Parker Electromechanical Product Technical Support department at 513-248-1714, 8:00 a.m. to 5:00 p.m., Eastern Time. You may call this same number after hours for emergency assistance. See *Customer Support Services* on page 1-4 for more information about support products and services.

Table of Contents

1 Introduction 1-1

Using this Manual 1-1
Hardware Versions 1-2
Downloading Applications and Projects 1-2
Documentation Library 1-3
Documentation Standards 1-3
Text Conventions 1-3
ISO Symbols 1-4
Customer Support Services 1-4
Product Technical Support 1-5
Technical Training 1-5
Getting Started 1-6

2 Installing the PowerStation 2-1

Selecting a Location 2-1
Underwriters Laboratories Approval 2-1
Environmental Guidelines 2-2
Touchscreen Considerations 2-2
Electrical Guidelines 2-2
Field Terminal Wiring Requirements 2-2
Temperature and Humidity Guidelines 2-2
Enclosure Guidelines 2-4
Radiated Emissions Guidelines 2-4
Class I, Division 2 Guidelines 2-5
Preparing for Installation 2-6
Creating the Cutout 2-6
Installing the P13 PowerStation 2-7
Mounting the P13 PowerStation 2-7
Installing an Optional AC Power Supply 2-9
Preparing a Location for the AC Power Supply 2-9
Prepare the Power Supply Mounting Surface 2-9
Mounting the AC Power Supply 2-9
Connecting the Power Supply to the Workstation 2-10

3 Starting Your PowerStation 3-1

PowerStation Connectors 3-1
Serial Ports 3-1
Settings and Pinouts for COM1 3-3
Settings and Pinouts for COM2 3-3
RS-485 Directional Control 3-5
Transferring Files from a PC to the P13 PowerStation 3-5
Keyboard and Mouse 3-7

Connecting a Serial Mouse 3-7
Ethernet Port 3-7
Configuring the Ethernet Interface 3-8
CompactFlash 3-9
Starting the PowerStation 3-9
Using the CompactFlash Card 3-9
Reinstalling the PowerStation Utilities 3-10
Restoring a CompactFlash Card 3-10
Writing to the CompactFlash Card 3-10
Reformatting the CompactFlash Card 3-11
Using the BIOS Utility 3-11
Using the BIOS Utility 3-12
Entering Setup 3-12

4 Maintaining the PowerStation 4-1

Maintaining the Touchscreen 4-1
Cleaning the Touchscreen 4-1
Calibrating the Touchscreen 4-2
Using the MachineShop Shell Calibration Utility 4-2
Replacing the CompactFlash 4-3
Performing Internal Maintenance 4-4
Electrostatic Discharge (ESD) Precautions 4-4
Removing the PowerStation from an Enclosure 4-5
Opening the PowerStation 4-5
Closing the PowerStation 4-7
Replacing the Fuse 4-8
Optional Components 4-9
AC Power Supply 4-9
Resolving Problems 4-10
Resolving Problems when Starting Up 4-10
Resolving Problems with the Touchscreen 4-12
Resolving Problems after Start Up 4-12
Accessing the PowerStation Utilities 4-14
Ordering Replacement Components 4-14

A PowerStation Specifications A-1

Physical Specifications A-2
Display Specifications A-3
Environmental Specifications A-4
Electrical Specifications A-5
Testing Specifications A-6
Faceplate Chemical Resistance A-7

B System Configuration Files B-1

System Configuration Files B-2
Config.sys File B-2
Autoexec.bat File B-2

INTRODUCTION 1

Thank you for purchasing a P13 PowerStation. The P13 PowerStation is a rugged, compact PC that is designed to be used as an industrial operator interface.

The P13 PowerStation has an all-in-one PC board with Serial, Ethernet, and USB ports. The P13 PowerStation's PC architecture allows you to run Parker's Interact HMI software product.

Mechanically, the P13 PowerStation is designed to fit an older P11 PowerStation mounting cutout and can be used as a direct replacement providing a PC/104 expansion bus is not required.



Important: You must upgrade to Interact version 6.17 or later before downloading applications to the P13 PowerStation.

Please take time to review this manual and the other documentation included with the P13 PowerStation before operating the unit.

Using this Manual

This manual is designed to help you set up and use your P13 PowerStation. The manual lists the PowerStation's specifications and describes its replacement and optional components. It also explains how to install the unit and how to maintain the unit in good condition.

This manual is divided into the following chapters:

Chapter 1 — Introduction: Presents an overview of this manual, the other documentation and software provided with the P13 PowerStation, and the steps necessary to get your PowerStation up and running. This chapter also describes Parker's customer support services.

Chapter 2 — Installing the PowerStation: Explains how to select an installation location, prepare for installation, and finally install the P13 PowerStation.

Chapter 3 — Starting Your PowerStation: Describes the ports available to connect the PowerStation to other devices and to a power source. And then explains how to start up the PowerStation.

Chapter 4 — Maintaining the PowerStation: Explains how to maintain the P13 PowerStation, including the touchscreen, replacing the CompactFlash, and performing internal maintenance.

Appendix A — PowerStation Specifications: Describes the P13 PowerStation's specifications.

Appendix B - System Configuration Files: This section includes a complete listing of the Config.sys and Autoexec.bat files.

Hardware Versions

There are two display resolutions offered with the P13 PowerStation:

- P1306Q, 320x240 (QVGA)
- P1306V, 640x480 (VGA).

Both versions are shipped with both Datalights ROM-DOS operating system and Interact HMI runtime software on a removeable compact flash card.

Each PowerStation is also shipped with a utilities CD containing drivers and backup copies of available software.

Downloading Applications and Projects

The P13 PowerStation is a runtime-only system, which means that you must develop your applications and projects on a development PC and download the application to the PowerStation.

Note Throughout this manual, all references to “development PC” or “development system” refer to the computer you use to develop applications.

See the documentation that came with your development software, such as Interact, for information about how to develop your applications or projects and download them to the PowerStation.

Documentation Library

The documentation set for this product contains:

Release Notes - Release notes are provided whenever there is important information about the PowerStation that does not appear in this manual. Be sure to read any available release notes before installing or operating the unit.

P13 PowerStation User Guide - This document contains all the information you need to configure, install and use the PowerStation.

You can download Parker Electromechanical product documentation from our web site at www.ctcusa.com. Click on the *Support* link then select *Product Manuals* to find the appropriate manual.

Documentation Standards

As you read this manual, notice that it uses the following documentation standards:

Text Conventions

Style	Type of Text
Bold	Names of buttons, tabs, menus, menu items, commands, files, keyboard keys, dialog boxes and other important terms.
Italic	Titles of User Guides, chapters, or sections and cross-references.
`Courier font`	Text to be entered from a keyboard.
+	Indicates two or more keyboard keys that must be pressed simultaneously. For example, **Ctrl+Alt+Delete**.
Note	Alternative approaches or issues you should be aware of while using a particular function.
Important	Information that will save time and minimize problems.
Warning	Information that will prevent equipment damage or personal injury.

ISO Symbols

Symbol	Meaning
	This symbol is the International Standards Organization (ISO) symbol for **Caution** (ISO 3864 No. B.3.1). This symbol denotes information that could affect operation of the monitor if the information is not properly followed.
	This symbol is the ISO symbol for **Caution - risk of electrical shock** (ISO 3864 No. B.3.6). This symbol denotes information that could cause personal injury from electrical shock or damage to equipment if the information is not properly followed.

Customer Support Services

Parker welcomes your thoughts and suggestions on our products and services. You can contact Parker Electromechanical by telephone, email or fax. You can also visit us on the World Wide Web to learn about the latest hardware, software, and customer support services.

Customer Support	
Main Telephone	513-831-2340
Technical Support	513-248-1714
Fax	513-831-5042
E-mail	**Sales:** emn_sales_ctc@parker.com
	Support: emn_support_ctc@parker.com
	Training: emn_training_ctc@parker.com
World Wide Web	http://www.parkermotion.com or http://www.ctcusa.com

Parker recognizes that every customer and every application has different support needs, as a result Parker offers a variety of support services designed to meet these needs. Parker offers two types of customer support services:

- Product Technical Support
- Technical Training

Product Technical Support

The Product Technical Support department welcomes any questions that might arise as you develop or run your applications. We offer complimentary support for all customers, including end users, original equipment manufacturers (OEM), system integrators or distributors.

If you have a question about the P13 PowerStation, be sure to complete the following steps:

- Check any release notes that shipped with the unit. These notes provide important information about the PowerStation.
- Consult the documentation and other printed materials included with the PowerStation.
- Review *Chapter 4, Maintaining the PowerStation.*
- Visit the Parker Automation - CTC Web site and register for the support forum. You can find the support forum by clicking on the *Support* tab from the Web site's home page: http://www.ctcusa.com.

If you cannot find a solution using one of the above sources, contact our Product Technical Support department at 513.248.1714, 8:00am to 5:00pm Eastern Standard time.

Technical Training

Parker Electromechanical offers training on all of our products, either at Parker in our state-of-the-art training facility, or at your site.

You can contact the Training Coordinator by telephone or e-mail:

- Telephone: 1-800-233-3329
- E-mail Parker Training: emn_training_ctc@parker.com

You can view a current training schedule on our web site at www.ctcusa.com or www.parkermotion.com.

Getting Started

Now that you have opened the P13 PowerStation, you are ready to unpack the unit, install it in a permanent location, and develop an application for it. Follow the steps below to get started.

1. Unpack the PowerStation and verify that you have received all of the components you ordered.
2. Install the PowerStation in a permanent location. See Chapter 2, *Installing the PowerStation,* for complete installation instructions.
3. Review the available connectors for the PowerStation, see *PowerStation Connectors* on page 3-1, for details.
4. Start up your PowerStation. See *Starting the PowerStation* on page 3-9, for more information.
5. Develop your application and download it to the PowerStation.



Important: You must upgrade to Interact version 6.17 or later before downloading applications to the P13 PowerStation.

INSTALLING THE POWERSTATION 2

Once you have unpacked the P13 PowerStation and verified that you have received all of the components you ordered, you are ready to install the PowerStation in a permanent location.

This chapter covers the following topics:

- Selecting a Location
- Preparing for Installation
- Installing the P13 PowerStation

Selecting a Location

The first step when installing the P13 PowerStation is to select an appropriate location for the unit. This is the most important aspect of the installation process because the location you select can affect the PowerStation's performance, ease-of-use, and life-expectancy. This section provides some guidelines that you should follow when selecting a location for the PowerStation.

Underwriters Laboratories Approval

In order to obtain Underwriters Laboratories (UL) approval for your PowerStation installation, the installation must meet the following criteria:

1. The PowerStation must be mounted in a standard industrial enclosure that provides fire protection.
2. The PowerStation products have been approved for NEMA Type 4/4X (indoor) and Type 12 ratings when mounted in a customer provided enclosure listed Type 4/4X or Type 12.

Environmental Guidelines

The environment is the area where the P13 PowerStation will be located. In general, you should select a place that limits the unit's exposure to adverse conditions such as dust, oil, moisture, and corrosive vapors.

Touchscreen Considerations

The P13 PowerStation's touchscreen is designed to meet the NEMA 4/4X and Type 12 rating. However, it is only rated NEMA 4/4X or Type 12 when properly mounted in a NEMA 4/4X or Type 12 enclosure.

The P13 PowerStation's touchscreen is resistant to a variety of chemicals. See *Faceplate Chemical Resistance* on page A-7 for a list of these chemicals. Make sure that the touchscreen is not exposed to chemicals other than those listed in *Faceplate Chemical Resistance* on page A-7.

Electrical Guidelines

To minimize unwanted electrical interference, select a location away from machinery that produces intense electrical noise. If you cannot do this, isolate input power to the unit and separate all data communication cables used with the unit from all AC power lines.

All serial communication cables should be 100% shielded with the shield tied to chassis ground at one end of the cable only.

See *Electrical Specifications* on page A-5 for a list of the P13 PowerStation's electrical specifications. Make sure that your power source is compatible with the PowerStation before starting the unit.

Field Terminal Wiring Requirements

In order to comply with UL 508 and 1604 requirements, use copper wire with 60C or 60/75C insulation and a tightening torque of 7.0 lb/in. (0.79 N-m) when connecting field terminal wiring to the PowerStation.

Temperature and Humidity Guidelines

You can safely operate the P13 PowerStation within the temperature range specified in *Environmental Specifications* on page A-4. However, if you are using a protective enclosure, remember that the temperature within an enclosure is generally higher than the external temperature. Read these guidelines to fully understand temperature implications.

The P13 PowerStation can dissipate no more than 10 watts maximum.

Heat builds up rapidly in enclosed environments, compromising the performance and life span of electrical equipment. If the PowerStation is operating inside an enclosure at temperature levels above its rated ambient temperature, you must cool the enclosure.

P13 PowerStation's have been tested for use in 50°C ambient, still air locations. This means that when installed, the ambient air surrounding the backside of the PowerStation is not expected to exceed 50°C. An example of this type of installation would be a PowerStation mounted in a small, sealed industrial enclosure.

The most commonly overlooked aspect of this type of installation is that heat generated by the device becomes trapped inside the enclosure and increases the ambient temperature surrounding the PowerStation. This increase in temperature can sometimes exceed an additional 15°C or more.

Although the thermal dynamics are not always linear, a temperature rise of 15°C would imply that the environment outside the sealed enclosure could not exceed 35°C (95°F), or the PowerStation would surpass its maximum operating temperature.

Do not mount a PowerStation into a sealed enclosure and mistakenly think that due to the 50°C rating of the product, the sealed enclosure can operate in a 50°C ambient environment without considering the affects of the internal heat build up.

Since elevated operating temperatures can have negative affect on the life of electronics, it is wise to consider the internal thermal rise. Passive venting for thermal convection, internal air circulation fans, filtered exhaust fans with filtered inlets, air conditioners, and other products are available in the market to assist in reducing the heat build up in the industrial enclosure.

There are many attractive NEMA Type 12, dust-tight fan/filter assemblies available today in which the filter can be inexpensively replaced or cleaned as part of a periodic maintenance schedule. Or in some cases, simply increasing the size of the enclosure, and thus the outside surface area for example, can have a significant, positive affect on the installation's thermal response.

Points to consider when performing a site review are:

1. What is the expected maximum outside ambient temperature that the industrial enclosure will experience?
2. Are there additional heat-generating components inside the enclosure?
3. What is the size of the enclosure? Larger enclosures dissipate more thermal energy than smaller ones.
4. In what kind of environment will the enclosure be installed - clean, water-tight, dust-tight? Can the enclosure be convection cooled or is active cooling required?

In summary, it is a wise investment to thermally plan the installation by anticipating, and eliminating, the heat build up inside a sealed enclosure. Not only will this extend the life of the electronics, but it will also reduce costly equipment downtime.

Enclosure Guidelines

Select an enclosure that is large enough to allow free airflow in and around the unit. You should allow a minimum of 2 inches between the enclosure and the top, bottom, and sides of the P13 PowerStation to allow access to the cabling and CompactFlash.

Also, make sure that the surface of the enclosure on which the P13 PowerStation is mounted is flat and free of raised or depressed areas.

Radiated Emissions Guidelines

This PowerStation has been tested to comply with international electromagnetic and emission standards. To reduce radiated emissions, ensure that there is a good earth connection to the PowerStation, which can be accomplished by utilizing the grounding stud located on the rear chassis of the product.This connection must be made with the shortest possible, heavy gage wire or braided cable. Low-resistance (<0.5 ohms) continuity should be verified with an ohmmeter for proper grounding. In addition, all communication cables should be shielded and grounded on only one end.

Class I, Division 2 Guidelines

If you purchased a Class I, Division 2-compliant PowerStation, it is suitable for use in Groups A, B, C, and D hazardous locations. You must follow these guidelines in order to maintain a safe operating environment.

- When performing field wiring, always use copper wire with 60C or 60/75C insulation and a tightening torque of 7.0lbs/in (0.79 N-m).
- Substitution of components can impair suitability for Class I, Division 2.
- The P13 PowerStation is intended to use a branch circuit protection rated 20 Amps *or less*.
- Make sure that the P13 PowerStation's "ON/OFF" switch is secured in the "ON" position using the supplied bracket.



WARNING!

Explosion Hazard!

- Do not connect or disconnect cables unless the power has been switched off, or the area is known to be non-hazardous. Keyboard, mouse, and USB ports are for system setup and diagnostics *only* and are not intended for permanent connection.
- Class I, Division 2 approval requires nonincendive field wiring for Class I, Groups A, B, C, and D hazardous locations only. With a temperature code of T5.
- Class I, Division 2 approval requires power switch restraints in hazardous environments.

Preparing for Installation

Once you select a location for the P13 PowerStation, you will need to create a cutout for the unit.

If you plan to operate the P13 PowerStation using AC power, and you purchased Parker's optional AC Power Supply, you will need to prepare a location for the Power Supply also.

Procedures for creating the cutout and preparing a location for the AC Power Supply are described below. If you already have an appropriate cutout and are using DC power, continue with See *Installing the P13 PowerStation* on page 2-7.

Note that the P13 PowerStation will fit into an existing cutout created for an older P11 PowerStation and it can use the existing DC power source.

Creating the Cutout

Be sure to follow the cutout diagrams in the dimensional drawings precisely. This ensures that the PowerStation is properly sealed in its enclosure. You can find the dimensional drawings on the P13 PowerStation CD shipped with your unit.

1. Measure the cutout dimensions as shown in the table below.
2. Attach the template securely to the mounting surface.
3. Cut out the shaded area on the template referred to as the *Panel Cutout Area*. To ensure the flatness of the mounting surface, when punching out the mounting hole, maintain proper surface flatness and edge quality.

The cutout dimensions for the P13 PowerStation are shown in the following table:

P13 Model	Cutout Height	Cutout Width
P1306Q	4.50”	6.20”
P1306V	4.50”	6.20”

4. Debur the edges of the cutout area, removing dirt and debris that might come in contact with the unit.
5. More information is available on the CD that comes with the P13 PowerStation. Be sure to refer to the dimensional drawings found on the CD when creating your cutout.

Installing the P13 PowerStation

Once you have prepared the location for your PowerStation, you are ready to install the unit. To do so, you need to mount the PowerStation to your enclosure using screws and metal clamps in what is called a **bracket assembly**.

The bracket assembly contains a mounting clamp with “feet” and a screw as shown in Figure 2-1.

Figure 2-1: Mounting Clamp

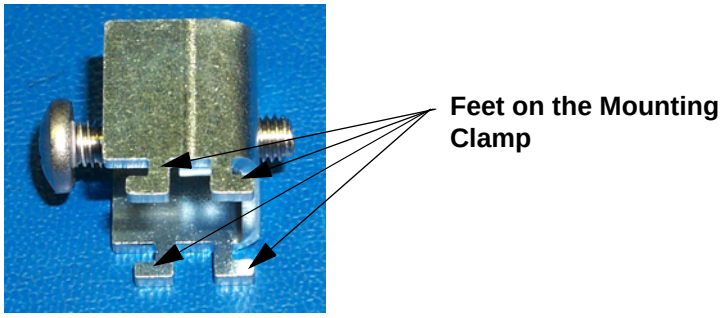

The mounting clamps secure to the PowerStation using a sliding mechanism. You must slide the feet of the mounting clamp into the appropriate slot on the PowerStation.

For your convenience, all necessary mounting hardware is included with the unit.

Mounting the P13 PowerStation

Complete the instructions below:

1 Slide the PowerStation into the cutout from the front.

2 Attach the 4 mounting clamps, with their screws to the back of the unit in the spaces provided. You will place 2 clamps on the top and bottom of the unit.

The clamps secure to the unit using the sliding mechanism shown in Figure 2-2.

Figure 2-2: Sliding Mechanism for the P13 PowerStation

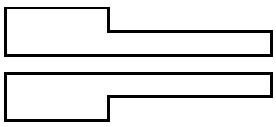

3 Slide the feet of the mounting clip into the slot, then slide the clip over to properly mount the unit.

4 Tighten each of the mounting screws against the front of the enclosure.

5 Torque them down to **6 in/lbs**.

6 Tighten the screws in a crosswise sequence to ensure a good seal and prevent damage. Tightening the bracket assembly may not ensure that the gasket seal is totally depressed by the bezel. You may see a small gap between the bezel and the enclosure.

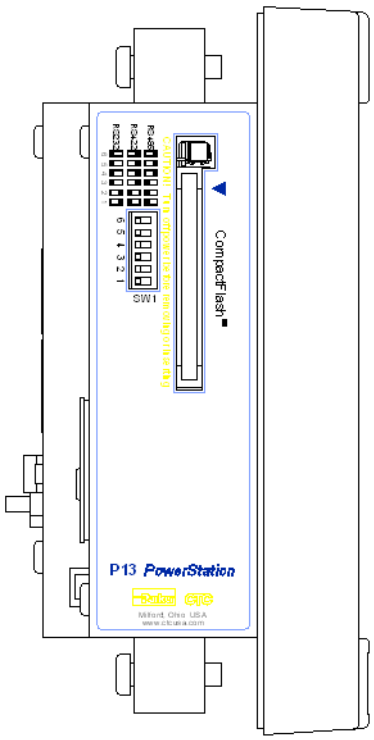

Installing an Optional AC Power Supply

The P13 PowerStation uses only 12 or 24 volt DC power. However, you can operate the PowerStation with AC power by using an optional AC Power Supply available from Parker. Use this section only if you intend to operate the P13 PowerStation using AC power. If you plan to use DC power, refer to *Installing the P13 PowerStation* on page 2-7.



Caution: Do not apply AC power directly to the unit or damage may occur.

Preparing a Location for the AC Power Supply

Be sure to select a location that provides protection from dust, oil, moisture, and corrosive vapors. If your enclosure is large enough, you can mount the Power Supply in the enclosure with the unit.

If you purchased Parker's optional AC Power Supply, P1X-PWRAC, and mounting kit BKT-1000, use the template that came with the mounting kit to prepare your location for the power supply. This can be inside or outside the enclosure where the PowerStation is installed.

Note: If you decide to mount the Power Supply in an enclosure, mount it on the bottom or on the side of the enclosure to provide the best convection cooling.

Prepare the Power Supply Mounting Surface

The P1X-PWRAC AC power supply is designed to be mounted using two metal brackets provided in the optional BKT-1000 mounting kit. These brackets are secured to the mounting surface using four screws. To prepare the mounting surface, complete the following steps:

1. Measure the cutout dimensions.
2. Securely attach the power supply template to the mounting surface.
3. Cutout the four 0.17" (4.3mm) holes as shown on the template.
4. Debur the edges of the cutout area, removing dirt and debris.

Mounting the AC Power Supply

After drilling the holes for the four screws, you can follow the steps below to mount the power supply:

1. Attach the power supply to the mounting surface using the supplied metal brackets.
2. Connect the power cord from the power supply to an AC power source.
3. Attach the ferrite to the section of the cord closest to the loose wires. The ferrite is located in the P13 mounting kit.

Connecting the Power Supply to the Workstation

Once you have mounted the power supply, you are ready to connect it to the workstation.

1 Slide the positive and negative wires into the appropriate slots on the power connector that was shipped with the workstation. See Figure 2-3.

Figure 2-3: Power Connector and Positive/Negative Wires

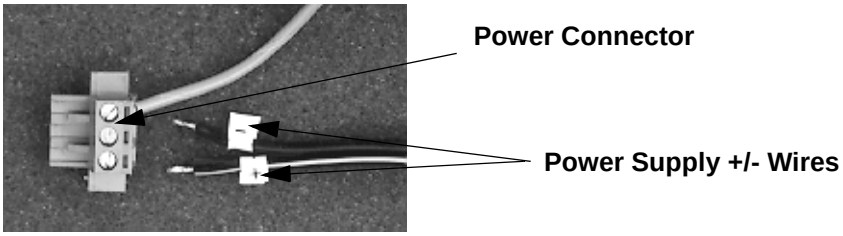

2 Connect the ground cable from the power connector to an earth ground.

3 Connect the power cord from the power supply to an AC power source.

4 Attach the power connector that you prepared in Step 1, to the workstation.

You have successfully connected the power supply to your workstation. You can now operate the workstation using AC power.

Caution: All P13 PowerStations are powered from a 12VDC or 24VDC power source. DO NOT connect AC power to the unit.

STARTING YOUR POWERSTATION 3

This chapter discusses the following topics:

- PowerStation Connectors
- Starting the P13 PowerStation
- Using the CompactFlash Card
- Using the BIOS Utility

The P13 PowerStation is shipped with the Documentation and Utilities CD. This CD contains all of the dimensional drawings, software, and drivers needed. If any of the software on your system becomes lost or corrupted, you can reinstall it from this distribution disk.

PowerStation Connectors

All P13 PowerStations have the following connectors:

- 2 serial ports
- 2 USB ports for the keyboard and mouse
- 1 Ethernet port
- 1 Compact Flash connector
- Power switch
- 1 ground stud

See the P13 PowerStation CD for dimensional drawings and a diagram to locate the components.

Serial Ports

The P13 PowerStation has two serial ports that you can use to communicate with external devices at baud rates of up to 115 Kbaud.

The COM1 port supports RS-232, while COM2 supports configurable RS-232, RS-422, and RS-485 communication standards.

The communication standard you select for COM2 depends upon the distance between the P13 PowerStation and the controller, as well as the

communication standards that the controller supports. Use a standard DB9 connector for communicating with this port.

Note: If you are using RS-232 communications, the length of the serial cable should not exceed 50 feet (15 meters).

RS-422 and RS-485 communications offer greater noise immunity than RS-232. These standards increase the maximum cable length to 4,000 feet (1,200 meters).

RS-422 communications are full-duplex (send and receive simultaneously), while RS-485 communications are half-duplex (send or receive).

For either configuration, be careful not to connect any wires to unused connector pins.

Settings and Pinouts for COM1

If you need to make a cable for communicating with COM1, Table 3-1 shows the pinouts and signal information for this port.

Table 3-1: COM1 Pinouts

Pin#	Signal
1	DCD, data carrier detect
2	RXD, received data
3	TXD, transmitted data
4	DTR, data terminal ready
5	Signal ground
6	DSR
7	RTS, request to send
8	CTS, clear to send
9	RI

Settings and Pinouts for COM2

If you need to make a cable for communicating with COM2, Table 3-2, shows the pinouts and signal information for this port.

Table 3-2: COM2 Pinouts

Pin#	RS-232 Communication	RS-422 Communication	RS-485 Communication
1	N/C	TXD-, transmitted data -	TXD-, transmitted data -
2	RXD, received data	TXD+, transmitted data +	TXD+, transmitted data +
3	TXD, transmitted data	RXD+, received data +	RXD+, received data +
4	N/C	RXD-, received data -	RXD-, received data -
5	Signal ground	Signal ground	Signal ground
6	N/C	N/C	N/C
7	RTS, request to send	N/C	N/C
8	CTS, clear to send	N/C	N/C
9	N/C	N/C	N/C



Caution: Note that RTS and CTS signals are not active in RS-422 and RS-485 configurations.

Once you make a cable for communicating with COM2, you will need to set the COM2 DIP switch settings.

COM2 is set to the RS-485 protocol by default. To change COM2 to the RS-232 or RS-422 protocol, you must change the COM2 DIP switch settings.

The DIP switch for COM2 is located on the side of the P13 PowerStation Unit, as shown in Figure 3-1.

Figure 3-1: COM2 Dip Switch Settings

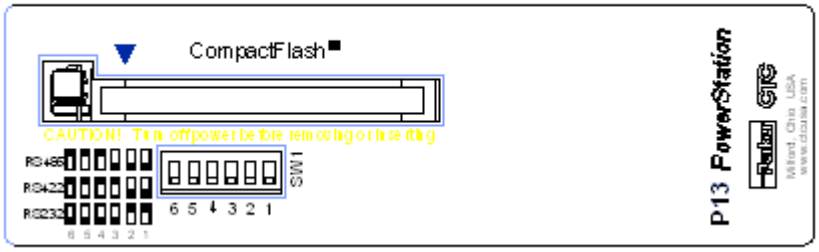

- The white boxes represent the tip of the switch.
- The upper half of the switch is the ON position, and the lower half of the switch is the OFF position.

To change the DIP switch settings, complete the following steps:

1 Choose the appropriate DIP switch settings from the diagram displayed on the side of the P13 PowerStation and the chart below.

Figure 3-2: DIP Switch

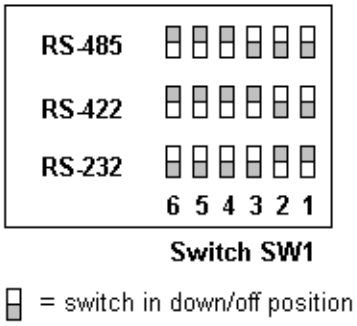

2 Using a pointed instrument such as a pen or pencil, flip the switches to the appropriate settings through the viewing window.

Figure 3-3, displays the connector pinouts and cable wiring required for communicating with COM1 or COM2 using the RS-232, RS-422 or the RS-485 protocol.

Figure 3-3: Connector Pinouts and Cable Wiring

RS-232	RS-422	RS-485
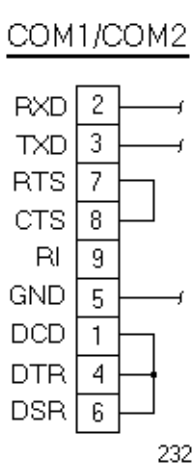	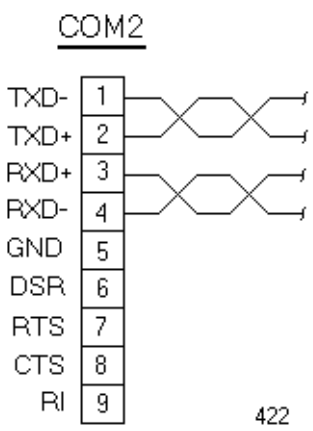	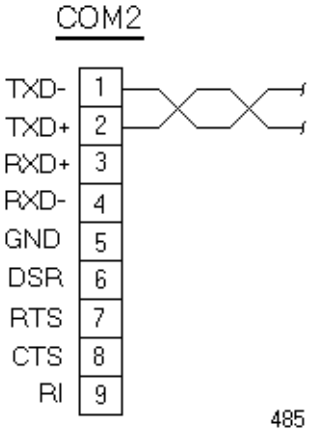

Note: Be careful not to connect any wires to unused connector pins.

RS-485 Directional Control

Many device drivers use the RTS signal to switch between receive and transmit mode. Some third party communication drivers expect the directional control to be automatic. The P13 PowerStation does not automatically switch between modes and depends on the driver to use the RTS signal to perform this operation.

Transferring Files from a PC to the P13 PowerStation

You can transfer files from a PC to the P13 PowerStation in one of three ways—through the Ethernet, the CompactFlash, or a Serial Transfer. If you plan to use a Serial Transfer, you will need a null modem cable. To construct your own cables, refer to Figure 3-4, for the appropriate settings, then continue with step 1 below.

Figure 3-4: Serial Transfer Cable Diagram

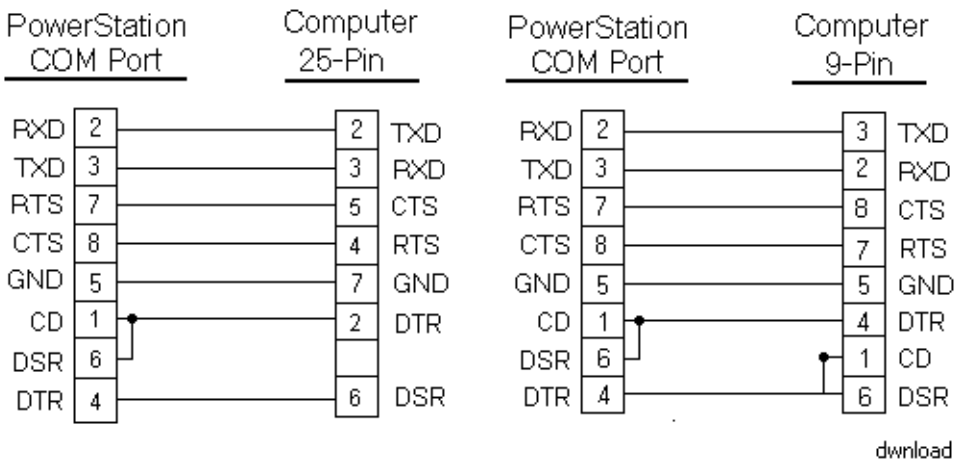

1. Connect a null modem serial cable to an available serial port on your development PC.
2. Connect the other end of the cable to the serial port on the P13 PowerStation.

Keyboard and Mouse

The P13 PowerStation allows you to use a USB keyboard and USB mouse in addition to the touchscreen. The PowerStation accepts any IBM AT-compatible keyboard, including 84-key standard keyboards and 101-key enhanced USB keyboards.

Connecting a Serial Mouse

If you need to connect a serial mouse to the serial port on the P13 PowerStation, you must check the settings to ensure that a COM port is not already configured as a Download only port. If the COM port that you want to use for the mouse is already assigned for Download, complete the following steps:

1. Select Settings from the MachineShop Shell Main Menu.
2. Select Direct Serial from the Settings menu.
3. Select Port.
4. Select the COM port that you want to use as the Download port. Or, you can select Disable to prevent any COM port from being used as a download port.
5. If the Serial Mouse is not already connected to the P13 PowerStation, connect it now.
6. Reboot the workstation.

Ethernet Port

The P13 PowerStation has an Ethernet RJ45 port with an Intel 82551ER 10/100 Mbps base-T controller that allows you to connect the PowerStation to a Local Area Network.

Table 3-3: Ethernet Pinouts

Pin#	Signal
1	TX+
2	TX-
3	RX+
4	N/C
5	N/C
6	RX-
7	N/C
8	N/C

Configuring the Ethernet Interface

The \NET directory of the P13 PowerStation's CompactFlash contains a configuration utility and all drivers necessary to configure the Ethernet interface on the PowerStation. Backup copies of these files are included on the MachineShop Shell Installation Disk. A list of the files appears in the \NET Directory Files.

Note: The MachineShop Shell Installation Disk is part of the Runtime Workstation Disk Set, which you can create from the MachineShop Installation CD shipped with your PowerStation. See the *MachineShop Installation Booklet* for instructions on how to create this disk.

File Name	Description
NET.BAT	A sample batch file you can use to run NetBIOS.
NET.CFG	Stores the interrupts and memory for the network drivers. The default PowerStation configuration reserves the following interrupts and I/O addresses. You cannot use these for the Ethernet interface. • COM1: Int 4, I/O 3F8 • COM2: Int 3, I/O 2F8 • Touchscreen: Int 11, I/O 3E8
NETX.EXE	The Novell Netware shell program that makes the final connection with the server.
*LSL.COM	A Novell driver that enables the workstation to communicate with different protocols.
*IPXODI.COM	A Novell driver that supports IPX protocol and other protocols over the same network.
Plug and Play Pro 100	The Plug and Play interface: 82557
E100BODI	This driver allows the PowerStation to communicate over a local area network.
*NETBIOS.EXE	Used by Interact to communicate over a network.
RSET8019.EXE	Configures interrupts and I/O addresses for the network.
TCPIP.EXE	Used by the PowerStation for TCP/IP communications.
TCPIP.INI	Stores settings for TCP/IP communications.

* Denotes files that can be downloaded from Novell's FTP site.

Interact will also communicate over any network or operating system that supports NetBIOS protocols. Examples include Lantastic, TCP/IP, Microsoft, and IBM.

If you need assistance with NetBIOS and networking, consult your network administrator or a certified network technician.

CompactFlash

The P13 PowerStation comes with a CompactFlash (CF) card. The CF is used as a removable hard drive that is recognized as drive C and provides non-volatile memory storage. The CF is well-suited for rugged environments where the PowerStation may vibrate or shake. Although the CF is removable, it is used as an IDE drive, which means you cannot remove it while the PowerStation is switched on.

The P13 PowerStation supports Type 1 or Type 2 CF cards.

You should purchase at least one additional CF card to serve as a backup for your primary CF card. It is also useful to own several cards to store different projects. You can purchase additional CF cards through Parker.



Note: Do not remove or insert the CF card when the unit is powered on or data on the card could be corrupted.

Starting the PowerStation

Once the P13 PowerStation has been mounted, you are ready to start up the unit. This procedure is described below.

Before connecting a power cord to your unit, make sure that you have read and understood *Environmental Specifications* on page A-4, and the *Testing Specifications* on page A-6, of this manual. For **permanently connected equipment**, incorporate a readily accessible disconnect device in the fixed wiring.



Note: Input voltage to the unit must be DC only.

1. Ensure the power on/off switch is in the off position.
2. Connect the power cord to a DC voltage source. Voltage input to the unit should be within the range specified in the *Environmental Specifications*.
3. Turn the P13 PowerStation on.
   You are now ready to download a project to the P13 PowerStation.



Important: You must upgrade to Interact version 6.17 or later before downloading applications to the P13 PowerStation.

Using the CompactFlash Card

The P13 PowerStation uses a removable CompactFlash (CF) card for storage purposes. You can remove the CF card, update the application files on the CF card from a PC, and then reinstall the CF card in the PowerStation.

You should purchase at least one additional CF card to serve as a backup for your primary CF card. You can also have several cards to store different projects. You can purchase additional CF cards from Parker.

The P13 PowerStation supports Type 1 or Type 2 CF cards.

Reinstalling the PowerStation Utilities

The P13 PowerStation is shipped with the operating system and software, which is installed on the CompactFlash card that comes with your system.

Backup copies of your software are provided on the P13 PowerStation CD that ships with your system. If any of the software on your system becomes lost or corrupted, you can reinstall it from this distribution disk.

Restoring a CompactFlash Card

Because you use a CompactFlash (CF) card as the startup drive in a P13 PowerStation, you should create a bootable CF card for the system from a blank or used card. This procedure will fix a ROM-DOS Shell CompactFlash card and let you do the following:

- Reinstall the PowerStation Utilities onto a CF card
- Prepare a new CF card for use

You can easily reformat a CompactFlash card by using CTC's Flashback Utility, which restores the ROM-DOS operating system and P13 PowerStation operating files to a CF card in one operation.

When you use Flashback, the following software will be replaced on your CompactFlash card:

- Operating system
- System drivers
- MachineShop Shell

Writing to the CompactFlash Card

To write to the CompactFlash card, you will need one of the following:

- A personal computer running Windows with a CD-ROM drive and a SanDisk ImageMate or any CompactFlash card PC reader/writer. A SanDisk Imagemate is a CompactFlash reader/writer that connects to the personal computer through a USB port.
- A laptop computer running Windows with a CD-ROM drive and a PCMCIA-to-CompactFlash adapter. The PCMCIA-to-CompactFlash adapter lets you read from or write to a CompactFlash card through your laptop's PCMCIA slot. You can order a PCMCIA-to-CompactFlash adapter (model number FLH-ADPT-2000) from your local Parker distributor.

Reformating the CompactFlash Card



Warning: Manually formatting a CompactFlash card in Windows NT, 2000, XP, or Vista before using Flashback could possibly make the CF card unusable.

Warning: Removing the CompactFlash card: During a disk transfer procedure, **do not** remove the CF card before issuing a Stop or shutting down the USB port service. Otherwise the last part of the data will not transfer to the CF card.

To reformat a CF card for a P13 PowerStation, complete the following steps on a personal computer or laptop:

1. Insert the CompactFlash card into the CompactFlash card PC reader/writer or the PCMCIA slot.
2. Insert the P13 PowerStation CD into the CD-ROM drive.
3. Use Windows Explorer to locate the file FlashUtil_PA_P13.exe from the Utilities directory on the CD-ROM drive.
4. Double-click FlashUtil_PA_P13.exe.

   The Flashback Utility dialog box appears.

Note: Make sure that you are using at least revision 104 of the Flashback Utility, which allows the formatting of the CF card even if the boot sector of the CF card is unreadable to ROM-DOS.

Reformatting a CompactFlash card using Flashback will erase your projects from the CF card. You will need to download your projects to the CF card again. After using Flashback, you may also need to recalibrate your P13 PowerStation display. For instructions, see *Calibrating the Touchscreen* on page 4-2.

5. Click the down arrow for the destination drive and choose the correct drive letter that was assigned to the CF.
6. Press the Restore Image button.

Note The Flashback Utility, will first format the compact flash, and then copy ROM-DOS, the Shell, and the utilities to the compact flash.

Using the BIOS Utility

This section discusses how to use the BIOS utility on the PowerStation. There are three instances in which you will need to use the BIOS utility program:

1. You are starting your system for the first time.
2. You have changed the hardware attached to your system.
3. The CMOS memory has lost power and the configuration information has been erased.

Every computer with a motherboard includes a special chip referred to as the BIOS or ROM BIOS (*Read Only Memory Basic Input/Output System).* The BIOS includes instructions to interact with the computer hardware. It also includes a test which ensures that the computer meets requirements to boot up properly. If the computer encounters an error during the test, you either hear a combination of beeps or see an error message on the screen.

Error messages can be fatal or non-fatal. Generally, the system can continue the boot up sequence with a non-fatal error. These are usually displayed on the screen along with the following instructions:

```
Press <F1> to RESUME
```

Write down the error message and press the F1 key to continue booting the system. If you want to change BIOS settings, refer to the following sections appropriate to the PowerStation you are using.

Using the BIOS Utility

Entering Setup

Before changing any of the BIOS settings, shut down the system and connect a keyboard to the PowerStation.

1. Turn on the PowerStation.
2. Press the **F1** key while the system splash screen displays to enter the BIOS setup utility.

When the BIOS utility is displayed, press a letter key or use the arrow keys to navigate through the menu. The following options are available:

- Motherboard Device Configuration

  Allows you to configure serial and parallel ports.

- Miscellaneous Configuration

  Allows you to display a splash screen and/or a summary screen. The timeout field sets the time for how long the screen is displayed. The time is in milliseconds and goes from 0 to 65535. Enter a timeout interval and press the Enter/Return key.

- Boot Order

  Allows you to alter the devices checked for a bootable image. The options are: Floppy Disk, Hard Drive, CD-ROM Drive and USB Floppy Disk. Use the arrow keys to select the order number and then press Enter to cycle through the options.

- Load Defaults

  Loads the default BIOS settings.

- Save Values Without Exit

  Saves the current BIOS settings without exiting the utility.

- Exit Without Save

  Exits the BIOS utility without saving any changes made.

- Save Values and Exit

  Exits the BIOS utility after saving any changes made.

MAINTAINING THE POWERSTATION 4

The PowerStation has been designed to provide years of trouble-free operation even in the harshest environments. However, occasionally you need to perform routine maintenance on some of the monitor's components.

This chapter provides instructions on maintaining your PowerStation:

- Maintaining the Touchscreen
- Replacing the CompactFlash
- Performing Internal Maintenance
- Optional Components
- Resolving Problems

Maintaining the Touchscreen

This section discusses the basic maintenance of your PowerStation's touchscreen, including:

- Cleaning the Touchscreen
- Calibrating the Touchscreen

Cleaning the Touchscreen

Occasionally, you may need to clean the monitor's screen. Clean the screen using warm, soapy water and a cloth. You can also use any non-abrasive cleaner. See *Faceplate Chemical Resistance* on page A-7, for a list of substances the screen can resist with no visible effect.

Do not use any harsh material or powder, such as steel wool or abrasive cleansers, to clean the screen surface. The surface is sensitive to scraping, sharp blows, or punctures. Therefore, keep screwdrivers or other sharp objects away from the screen surface.



Warning Do **not** clean the unit while it is running. Turn off the monitor before cleaning it in order to avoid inadvertently activating the touchscreen.

Calibrating the Touchscreen

Calibrating the touchscreen ensures that it is aligned with your display. The monitor's touchscreen is calibrated before leaving Parker. However, you may need to recalibrate the touchscreen in certain circumstances, such as:

- Moving a CompactFlash card between P13 PowerStations
- After re-imaging the CompactFlash card
- Whenever the cursor does not follow the touches on the screen.

Using the MachineShop Shell Calibration Utility

Interact software comes with a calibration utility located in the MachineShop Shell. To calibrate the touchscreen driver, complete the following steps:

1. From the *MachineShop Shell Main Menu*, select the *Settings* option, then select the *PowerStation* option.
2. The PowerStation Settings page will appear.
3. Select the *Calibrate Touchscreen* option. The calibration routine will run automatically.
4. Use your finger to touch the + on the screen.
5. Repeat the previous step two more times. Each time you touch the + you will hear a faint beep to indicate that the touch has been accepted.

   After the third time, your touchscreen will be calibrated.

Replacing the CompactFlash

At some point, you will probably need to remove the CompactFlash (CF) card from the P13 PowerStation flash socket for one reason or another. To do so, complete the following steps:

1 Turn off the P13 PowerStation.

Caution: The PowerStation must be turned off when inserting or removing the CF card to avoid corrupting data.

2 Locate the ejector next to the CF socket as shown in Figure 4-1.

Figure 4-1: CompactFlash Ejector.

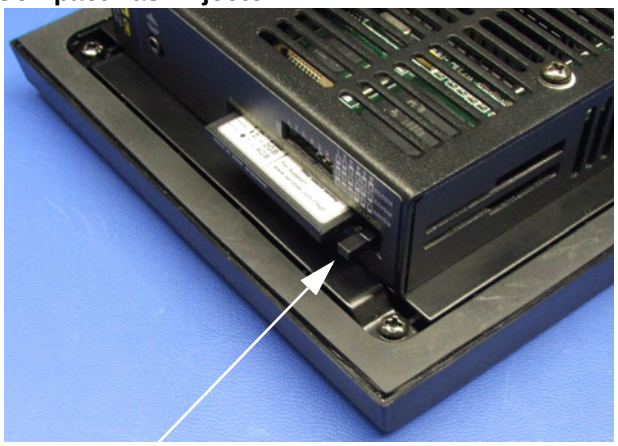

Ejector Button

3 Push the ejector button two times, once to extend the button, then again to pop out the CF card.

4 Remove the CF card.

5 Carefully insert the new card with the connector on the card aligning with the pins inside the socket.

6 Push the CF card into the slot until the card is securely seated in the socket. Do not force!

Note: The CompactFlash has an arrow near one edge that always lines up with a matching arrow on the label of the P13 PowerStation. Insert the CompactFlash so the arrows line up and the card seats properly. **Do not** force the CompactFlash in the wrong way.

If you need additional storage capacity for the P13 PowerStation, you can purchase additional CompactFlash cards from Parker. Be sure to purchase at least one additional flash card to serve as a backup for your primary CF.

Performing Internal Maintenance

Before doing any internal maintenance, be sure to read and understand the following procedures to prevent injury to yourself and/or damage to the PowerStation.

- Electrostatic Discharge (ESD) Precautions
- Removing the PowerStation from an Enclosure
- Opening the PowerStation
- Replacing the Fuse

Important: For safety reasons, the PowerStation should be opened *only* by qualified service personnel.

Electrostatic Discharge (ESD) Precautions



Modern integrated electronic devices, including the PowerStation, are extremely sensitive to electrostatic discharges (ESD) and fields. Before you open the system, be sure to follow these simple precautions to protect you and the PowerStation from harm resulting from ESD.

- Always disconnect power from the PowerStation before opening. **Do not** touch any components of the PowerStation while the system is on.
- Disconnect power before performing any internal maintenance or troubleshooting.
- Only handle internal components of the PowerStation in an ESD-safe location, using appropriate grounding methods.
- Wear a grounding wrist strap for continuous protection.
- Be particularly careful not to touch the components on the printed circuit boards.
- Keep any PowerStation part in its anti-static packaging when it is not installed in the unit and place it on a static dissipative mat when you are working on it.

Removing the PowerStation from an Enclosure

To remove the PowerStation from it's enclosure, follow the steps below.

WARNING!

Explosion Hazard!

- Do not connect or disconnect cables unless the power has been switched off, or the area is known to be safe.

1. Turn off the power to the unit.
2. Disconnect the following cables:
   - Power Input cable
   - Ground cable
3. Take off the clamps.
4. Place the PowerStation face down on a static dissipative mat, in a location free from dirt and moisture and protected against static discharge.

Opening the PowerStation

Once you have removed the PowerStation from it's enclosure, you can open it up. Follow the steps below.

1. Remove the CompactFlash card from it's slot by pressing the eject button on the side of the PowerStation, as shown below.

Figure 4-2: Eject Button

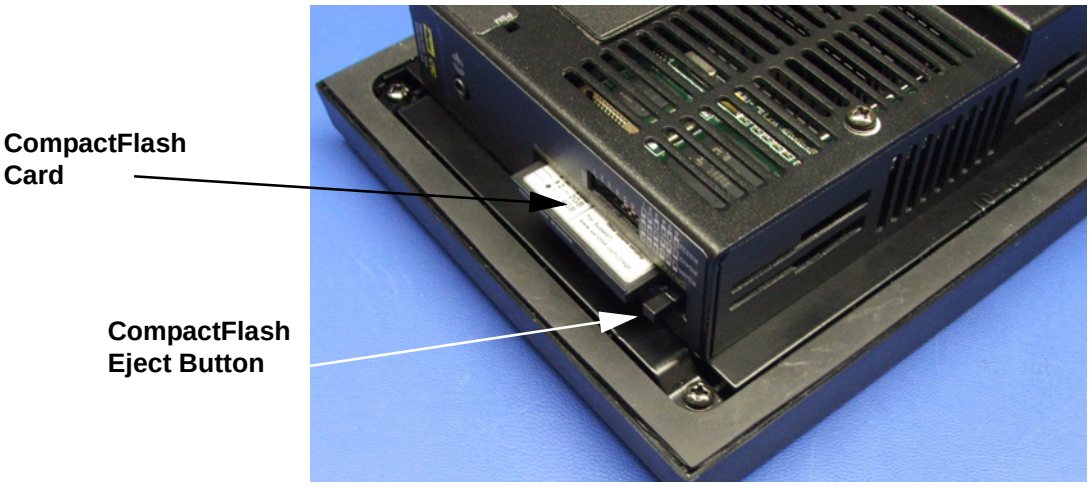

2. Press in the eject button to return it to it's retracted position.
3. Remove the 4 screws on the P13 PowerStation as shown below.

Figure 4-3: Backshell Screws

Remove these screws from the back of the PowerStation.

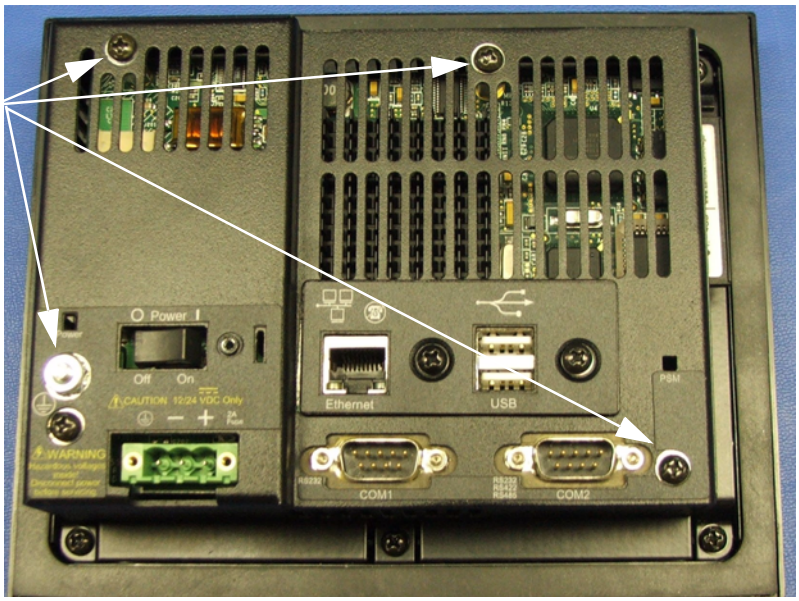

4 Lift the backshell off of the PowerStation to expose the board.

You are now ready to perform any internal maintenance necessary.

Important: When you lift the backshell off of the unit the USB ground comes off of the backshell. You may find it on the board as shown below.

Figure 4-4: USB Grounding on P13

USB Ground

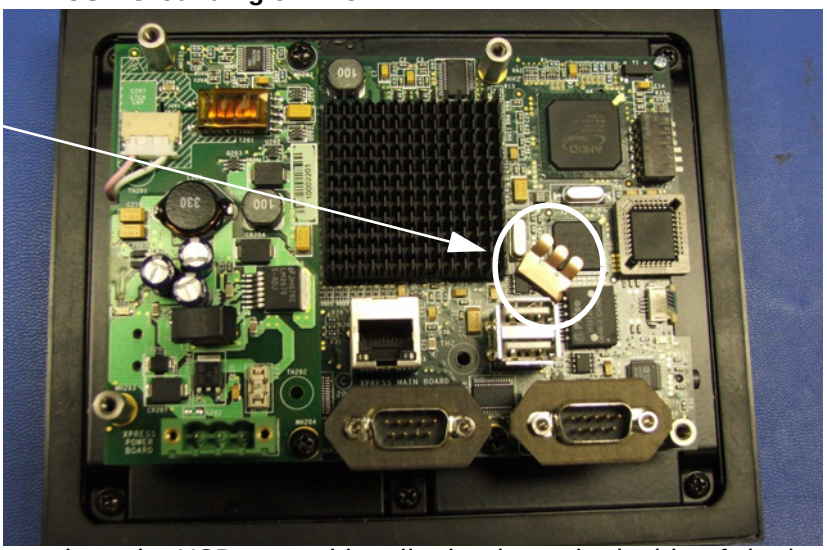

Simply replace the USB ground by clipping it on the inside of the backshell, refer to Figure 4-5.

Figure 4-5: Replacing the USB Ground on the Backshell

The USB ground is replaced on the inside of the backshell.

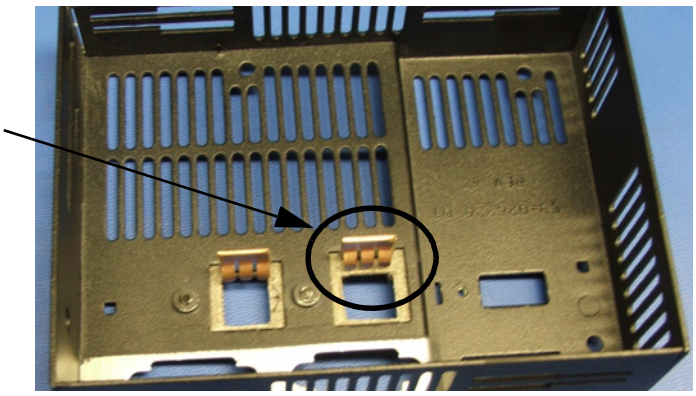

Closing the PowerStation

1. Replace the USB ground on the inside of the backshell as discussed on page 4-6.
2. Replace the backshell on the PowerStation, refer to steps 3 and 4 on page 4-6.
3. Remount the PowerStation in the enclosure, refer to *Installing the P13 PowerStation* on page 2-7.
4. Reconnect the following cables:
   - Power Input cable
   - Ground cable
5. Turn on the PowerStation.

Replacing the Fuse

The P13 PowerStation has a protective fuse that you can replace by opening up the back cover. An ohm meter is required to see whether the fuse is open or closed. The required fuse is listed below.

- P1306Q/P1306V - Use a Littlefuse Nano SMF Slow Blow Type fuse. The part number is R454 002.

Caution: Using a fuse that is rated differently than indicated, can cause damage or fire to occur.

To replace the fuse, complete the following steps:

1. Remove the PowerStation from its enclosure as discussed on page 4-5.
2. Open the PowerStation, refer to page 4-5.
3. Locate the fuse on the board according to the picture below.

Figure 4-6: Fuse Location

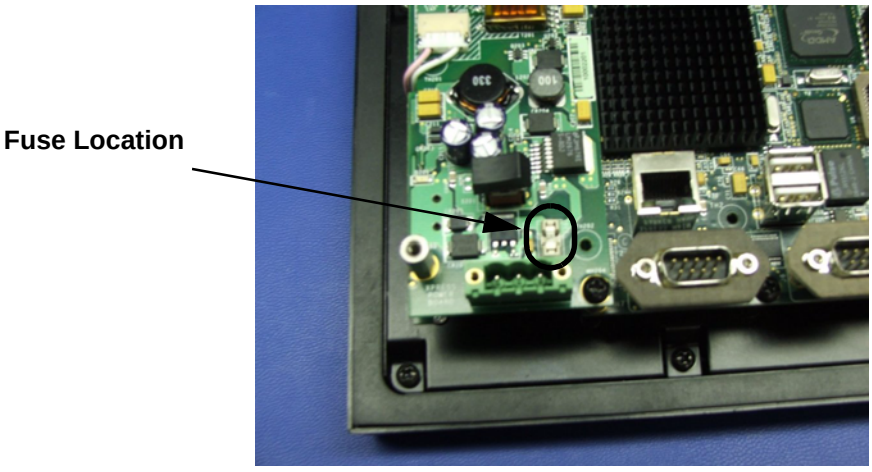

4. Use an ohm meter to see if the fuse is open or closed.
   - If open, use a pair of needle nose pliers to lift the fuse from the fuse holder.
   - If closed, the fuse is okay and there is no need to replace it.
5. Insert the new fuse into the fuse holder and reassemble the unit.

Optional Components

Parker has an optional component that you may want to purchase for the P13 PowerStation—an AC Power Supply.

AC Power Supply

The P13 PowerStation uses DC power to save space and limit the amount of heat generated by the unit. However, if you require the PowerStation to use AC power, you can purchase an AC Power Supply, P1X-PWRAC, that includes an AC Power Supply and a power cord.

You can also purchase a mounting bracket kit, BKT-1000, for the Power Supply. See *Preparing a Location for the AC Power Supply* on page 2-9 for instructions on how to mount the AC Power Supply.



Do not apply AC power directly to the unit or damage could occur.

Resolving Problems

This section provides some basic troubleshooting steps to help you indentify and correct problems you may have with the P13 PowerStation. Each problem is described and followed with one or more possible solutions. Begin with the first solution and continue until you have solved the problem or tried all of the solutions.

If the problem persists, look through the other problems listed in this section to determine if additional symptoms exist that might require action. If you cannot solve the problem, or if you encounter a problem that is not documented in this section, contact your Parker equipment supplier or Product Technical Support department at (513) 248-1714.



Important: You must upgrade to Interact version 6.17 or later before downloading applications to the P13 PowerStation.

Use *Table 4-1: Troubleshooting Guide* to find resolutions to basic problems that may occur.

Table 4-1: Troubleshooting Guide

General Problem	Specific Issue	Page
Resolving Problems when Starting Up	The LED Power indicator on the back of the unit does not light.	4-10
	The startup halts with the Award (System Info) screen displayed.	4-11
	The AUTOEXEC.BAT file and/or CONFIG.SYS file does not execute properly.	4-11
Resolving Problems with the Touchscreen	After startup, the touchscreen doesn't work properly, the calibration is incorrect, or the touchscreen makes a chirping noise.	4-12
	After calibrating the touchscreen, either the touchscreen doesn't work properly or the cursor doesn't follow your finger.	4-12
Resolving Problems after Start Up	The display appears to be blank or very dim.	4-12
	The ROM-DOS prompt "C:\" is displayed instead of the MachineShop Shell Main Menu.	4-13
	The Ethernet port doesn't work.	4-13

Resolving Problems when Starting Up

Some of the most common problems that users encounter with PCs occur when they start up their systems. This section describes some problems that may occur in the P13 PowerStation during startup and solutions for these problems.

The LED Power indicator on the back of the unit does not light

1 Check to see whether the power switch is in the On position, and the P13 PowerStation is operating correctly.

   a. If the P13 PowerStation appears to be operating properly, the LED indicator may be defective. Contact your Parker equipment supplier or Parker Product Technical Support department for assistance.

   b. If the P13 PowerStation does not appear to be operating properly, restart the PowerStation.

2 Check the DC power line to determine whether the DC voltage is either 12VDC or 24VDC.

3 Check the power connector to determine whether the leads are properly connected and not reversed. The positive line should connect to the positive terminal, the negative lead should connect to the negative terminal, and the ground lead should connect to the ground terminal.

4 Check to see if you have a blown fuse. To replace the fuse, see *Replacing the Fuse* on page 4-8.

The startup halts with the Award (System Info) screen displayed

1 Check for a loose CF card.

   Restart the P13 PowerStation.

The AUTOEXEC.BAT file and/or CONFIG.SYS file does not execute properly

Some startup problems are caused by a corrupted or modified AUTOEXEC.BAT or CONFIG.SYS file. Parker includes backup copies of these files in the \CTC directory on your PowerStation's CompactFlash Disk and on the PowerStation Start Disk. These files are called AUTOEXEC.CTC and CONFIG.CTC.

For a complete listing of the AUTOEXEC.BAT and the CONFIG.SYS files, see *Appendix B*.

If you suspect a problem with either the P13 PowerStation's AUTOEXEC.BAT or CONFIG.SYS files, use the ROM-DOS Copy command to create a backup copy of your current file and overwrite the suspect file with the appropriate backup file. For example, if the AUTOEXEC.BAT file becomes suspect, type the following commands at the ROM-DOS prompt:

```
copy autoexec.bat autoexec.old
copy \ctc\autoexec.ctc autoexec.bat
```

1 Press Exit on the MachineShop Shell menu.

2 Run ROM-DOS Edit by typing NED and then the file name that you want to edit.

Important: You cannot load the touchscreen driver and a serial mouse driver such as MOUSE.COM simultaneously. The P13

PowerStation will only load the driver that is specified first in the AUTOEXEC.BAT file.

Resolving Problems with the Touchscreen

This section describes the problems that may occur with the touchscreen and the subsequent solutions to these problems.

After startup, the touchscreen doesn't work properly, the calibration is incorrect, or the touchscreen makes a chirping noise

1. If the P13 PowerStation is operating correctly otherwise, restart the unit.
2. The touchscreen calibration might be in error. See *Calibrating the Touchscreen* on page 4-2 of this manual for instructions on how to calibrate the touchscreen.
3. Check the AUTOEXEC.BAT file. See the Appendix B of this manual for information about the command lines that should appear in the AUTOEXEC.BAT file.

   a. Verify that the touchscreen drivers are loaded. Look for the following lines in the AUTOEXEC.BAT file:

   ```
   SET TOUCH_PATH=C: \HAMMOUSE
   CALL %TOUCH_PATH% \TS.BAT
   ```

   b. Verify that a serial mouse driver such as MOUSE.COM is not loading before the touchscreen driver. Look for the following line in the AUTOEXEC.BAT file:

   ```
   C:\MOUSE.COM
   ```

   c. Remove the line if it is found anywhere other than where it is shown in the default AUTOEXEC.CTC listing. See *Appendix B*.

After calibrating the touchscreen, either the touchscreen doesn't work properly or the cursor doesn't follow your finger

1. If using a serial mouse, make sure the serial port (COM2 only) is configured for RS-232.
2. The internal touchscreen cable connection may be loose, disconnected, or improperly connected. Call customer service. See *Customer Support Services* on page 1-5 of this manual.
3. If all of the above remedies do not work, you may need to replace the touchscreen. Replacement Touchscreen kits are available through Parker.

Resolving Problems after Start Up

This section describes problems that may occur after startup and details the solutions to these problems.

The display appears to be blank or very dim

1. Check to see if the power switch is in the on position, and the LED Power indicator on the back of the P13 PowerStation is lit.
2. If the P13 PowerStation is not operating properly, restart the unit.
3. If the screen still appears to be blank or very dim, and the unit has been in operation continuously for a long time, replace the backlight bulb. At the time this manual was developed, replacement backlight bulb kits were not yet available. Consult your price list for availability of backlight bulb kits.

The ROM-DOS prompt "C:\" is displayed instead of the MachineShop Shell Main Menu

1. If the P13 PowerStation appears to be operating correctly otherwise, restart the unit.
2. Make sure that the MachineShop Shell software is being loaded.

   a. Verify that the following lines appear in the AUTOEXEC.BAT file.

   b. Verify that the lines do **not** have the word “REM” in front of them:

   ```
   CD \CTC
   PSU
   ```

3. The AUTOEXEC.BAT file may be corrupted or may have been modified. See *Appendix B* for information about the command lines that should appear in the AUTOEXEC.BAT file.

The Ethernet port doesn’t work

1. Make sure the Ethernet cable is plugged in.
2. Make sure that the networking software is loading properly. Verify that the following lines appear in the AUTOEXEC.BAT file and at least one of the two lines do **not** have the word “REM” in front of it as appropriate:

   ```
   CALL C:\NET\NET.BAT
   LH C:\NET\TCPIP.EXE
   ```

   See *Appendix B* for information about the command lines that should appear in the AUTOEXEC.BAT file.
3. Make sure that you properly configured the networking software. See *Configuring the Ethernet Interface* on page 3-8 of this manual for a list of the drivers that configure your Ethernet interface.

Accessing the PowerStation Utilities

The P13 PowerStation is shipped with the P13 PowerStation Documentation and Utilities CD. This CD contains all of the dimensional drawings, software, and drivers needed for the P13 PowerStation.

If any of the software on your system becomes lost or corrupted, you can reinstall it from this distribution disk.

Ordering Replacement Components

The P13 PowerStation is designed to be a simple yet reliable unit to maintain. However, if you need to purchase replacement components for the PowerStation, Parker carries a complete line of replacement components.

Component	Description
CompactFlash (CF) card	If you need additional storage capacity, you can purchase additional Compact Flash cards from Parker. You should purchase at least one additional compact flash card to serve as a backup for your primary CF. See page 4-3, for instructions on how to replace CF cards.
DRAM	If you need to upgrade or replace the DRAM, Parker carries replacement DRAM (DDR DIMM). The P13 PowerStation comes with a minimum of PC3200 Type, 128MB DDR DRAM, but the unit supports a total of 1 GB maximum.

POWERSTATION SPECIFICATIONS

A

This appendix outlines important specifications for the PowerStation. It is a good idea to familiarize yourself with the specifications before operating your unit.

- Physical Specifications
- Display Specifications
- Environmental Specifications
- Electrical Specifications
- Testing Specifications
- Faceplate Chemical Resistance

Physical Specifications

Physical specifications include the PowerStation's CPU, memory specifications, display types, storage capacity, and other physical characteristics. These specifications are shown in Table A-1, below.

Table A-1: Physical Specifications

Category	P1306Q/P1306V
Operating System	ROM-DOS 6.11
CPU	• AMD LX700 CPU, 433 MHz • 256KB L1 & L2 Cache
Memory	• Up to 1 GB DDR SDRAM Maximum • 400 MHz, PC 3200 • 200-pin SODIMM Socket
BIOS	• Insyde XpressROM
Storage	• 128MB - 8G CompactFlash card • Supports Type 1 and 2 CompactFlash cards

I/O Ports	• Two 9-pin serial ports (16550 compatible)
	  • 1 RS232
	  • 1 RS232/422/485 (configurable)
	• One RJ45 Ethernet connector; Intel 82551ER 10/100 Base-T controller
	• Two USB 2.0 ports

Dimensions H x W x D	• 6.00"H x 7.40"W x 3.00"D
Weight	• 2.56 lbs/1.16 kgs
Keyboard	• USB keyboard only
Mouse	• USB mouse only
Touchscreen	• Analog Resistive
Audible	• Piezoelectric Beeper

Display Specifications

Display specifications include the type of monitor, size, resolution, and other display properties. These specifications are shown in the following table.

Table A-2: Display Specifications

Property	P1306Q Description	P1306V Description
Type	Active Color TFT	Active Color TFT
Display Diagonal Size	5.7"	5.7"
Resolution	QVGA (320 x 240)	VGA (640 x 480)
Brightness	470 NITS	350 NITS
Bulb Life	75,000 hours	75,000 hours
Viewing Angle		
Left/Right	$70^{o}/70^{o}$	$80^{o}/80^{o}$
Up/Down	$70^{o}/50^{o}$	$80^{o}/70^{o}$

Environmental Specifications

Even though the P13 PowerStation is built to withstand harsh environments, limit the PowerStation's exposure to adverse conditions such as dust, oil, moisture, and corrosive vapors to minimize maintenance and repair costs.

Remember that the temperature within a protective enclosure is generally higher than the external temperature. Thus, if the P13 PowerStation is operating inside an enclosure at temperature levels above its rated ambient temperature, you must cool the enclosure.The PowerStation conforms to the environmental specifications listed in Table A-3.

Table A-3: Environmental Specifications Chart

Category	Specifications
Operating Temperature	32 to 122°F (0 to 50°C) ambient (air temp. outside of P13 backshell)
Storage Temperature	• -22 to 176°F (-30 to 80°C)
Relative Humidity	0% to 95% non-condensing
Shock Rating	• 10g peak; 11ms (operating) • 30g peak; 11ms (non-operating)
Operating Vibration	• 5-500Hz: 0.5 grms random
Faceplate Design	Tested for UL Type 4/4X or Type 12 (optional) Environment **Warning:** The PowerStation is rated NEMA Type 4/4X or Type 12 only if it is installed in a NEMA 4/4X or Type 12 rated enclosure.

Electrical Specifications

The P13 PowerStation's power supply automatically detects the input voltage level and adjusts accordingly. However, always use reliable sources of power, and isolate all communication cables from AC power lines to enhance noise immunity.

If possible, locate the P13 PowerStation away from machinery that produces intense electrical noise (arc welders, etc.). Otherwise, isolate the input power to the PowerStation from the equipment generating electrical noise.

The P13 PowerStation's electrical specifications appear in Table A-4.

Table A-4: Electrical Specifications Chart

Category	P1306Q/P1306V
Input voltage	24 VDC @ .7A max Surge: 1.5A max (Range: min 10 VDC, 28 VDC max)
Fuse	Littlefuse Nano SMF Slow Blow Type fuse. The part number is R454 002.
Heat Dissipation	10 Watts Maximum



Caution: Do not apply AC power to the unit or damage may occur.

Testing Specifications

The P13 PowerStation conforms to the testing specifications listed below. Table A-5, shows the European community immunity and emission standards for electronic equipment: EN61000-6-2 (2001) and EN55011 (A2:2002).

Table A-5: European Community Specifications

Test	Specification
ESD immunity	EN61000-4-2
RF immunity	EN61000-4-3
Electrical fast transient/burst	EN61000-4-4
Surge immunity	EN61000-4-5
RF common mode immunity	EN61000-4-6
Power frequency magnetic field immunity	EN61000-4-8
Voltage dip and interrupt immunity	EN61000-4-11
Conducted & radiated emissions	EN55011

Table A-6, shows the mechanical testing specifications.

Table A-6: Mechanical Testing Specifications

Test	Specification
Surge withstanding capacitance	EN61000-4-5
ESD requirements	EN61000-4-2
Electrical fast transient	EN61000-4-4
Operating vibration	0.5 grms/MIL-STD-810F 514.3
Mechanical shock	IEC-68-2-27/MIL-STD-810 516.3
Non-operational vibration	1.0 grms/MIL-STD-810F 514.3

Faceplate Chemical Resistance

The touchscreen of the P13 PowerStation is resistant to the chemicals listed in Table A-7.

Table A-7: Chemical Resistance Chart

Touchscreen Chemical Resistance		
Acetone	Sulfuric Acid 10%	Motor oil
MEK	Hydrochloric Acid 10%	Gasoline
Toluene	Acetic Acid 10%	Machine oil
Methylene Chloride	Phosphoric Acid	Salad oil
Isopropyl Alcohol	Sodium Hydroxide 10%	Silicone
Xylene	Carbon Tetrachloride	Silicone grease G31
Hexane	Potassium Hydroxide	Kerosene
Butyl Cellosolve	Ammonia Water 10%	Gas oil
Cyclohexanone	Sodium Chloride 26%	Silicone oil
Trichloroethylene	Zinc Chloride 81%	Engine oil
Ethanol	Cottonseed Oil	Cleanser
Methanol	Glycerin	
Nitric Acid 10%	Grease	

Note: Sustained exposure to brake fluid or Gunk® brand degreaser can cause damage to monitor materials.

All P13 PowerStation surfaces exposed outside your enclosure are resistive to the following chemicals:

• Commercial glass cleaners	• Silicone based lubricant
• Motor oil	• Alcohol (ethyl, methyl)
• Ammonia (10% dilute solution)	• Automatic transmission fluid
• Diesel fuel	• Hydraulic fluid
• Gasoline (leaded, unleaded)	

SYSTEM CONFIGURATION FILES

B

Appendix B specifies the contents of two configuration files, CONFIG.CTC and AUTOEXEC.CTC. Use this information to modify or correct the files CONFIG.SYS and AUTOEXEC.BAT on the P13 PowerStation.

- System Configuration Files

System Configuration Files

Parker includes backup copies of the *CONFIG.SYS* file and *AUTOEXEC.BAT* file in the \CTCTEMP directory on your PowerStation's Compact Flash disk and on the PowerStation Start disk. These files are called CONFIG.CTC and AUTOEXEC.CTC.

CONFIG.SYS File

```
SHELL=C:\COMMAND.COM /E:1024 /P
FILES=30
BUFFERS=30
STACKS=9,256
DEVICE=C:\DOS\HIMEM.SYS
DOS=HIGH,UMB
REM
REM !!! NOTE !!!
REM EMM386 can be used to free up more conventional memory for use by
REM Interact, by allowing TSRs to be loaded high. Just remove the word
REM 'REM' in front of the appropriate command, and adjust the
REM parameters as required for your system's configuration.
REM
REM DEVICE=C:\DOS\EMM386.EXE NOEMS
REM
REM IMPORTANT: Always include the NOEMS switch when using
REM EMM386 with Interact.
REM
```

AUTOEXEC.BAT File

The lines in the following table must appear in the P13 PowerStation's AUTOEXEC.BAT file for the unit to operate properly. The AUTOEXEC.BAT file that Parker supplies includes these lines and is located in the \CTCTEMP directory on the PowerStation's Compact Flash card in a file called AUTOEXEC.CTC.

Please make sure that the AUTOEXEC.BAT file on your P13 PowerStation's CF card includes the command lines shown in the left-hand column of AUTOEXEC.BAT file.

```
@ECHO OFF
REM ****************************************************************
REM PA PowerStation Autoexec.bat
REM MachineShop Suite 1.05
REM Copyright (c) 2004 CTC Parker Automation
REM ****************************************************************
PROMPT $p$g
PATH C:\;C:\DOS;C:\CTC
SET TEMP=C:\DOS
REM ****************************************************************
REM Touchscreen configuration options
REM ****************************************************************
SET TOUCH_ADDR=3E8
SET TOUCH_IRQ=11
REM ****************************************************************
```

```
REM Set up Interact environment variables for MS Shell.
REM ************************************************************
SET INTERACT=C:\INTERACT
SET INTERACT_FILES=C:\INTERACT\APPFILES
SET INTERACT_STARTUP=C:\STARTUP
REM ************************************************************
REM Install PowerStation Special Functions
REM ************************************************************
LH C:\CTC\BIOSTSR
REM ************************************************************
REM Verify running on a PA PowerStation
REM ************************************************************
C:\CTC\PACTRL -A -S
IF ERRORLEVEL 108 GOTO ERROR
REM ************************************************************
REM If an external mouse is connected, MOUSE will install successfully
REM and create a new MOUSE.INI file.
REM ************************************************************
CD \CTC
IF EXIST C:\CTC\MOUSE.INI DEL C:\CTC\MOUSE.INI
LH C:\CTC\MOUSE
REM ************************************************************
REM Initialize touchscreen drivers.
REM ************************************************************
SET TOUCH_PATH=C:\HAMMOUSE
CALL %TOUCH_PATH%\TS.BAT
REM ************************************************************
REM Load NETWORK drivers -- NOVELL
REM Remove REM on the CALL statement to load NOVELL network batch file.
REM If used, this must be called BEFORE loading TCPIP.
REM ************************************************************
CD \NET
REM CALL C:\NET\NET.BAT
REM ************************************************************
REM Load TCP/IP Stack
REM ************************************************************
LH C:\NET\TCPIP
REM ************************************************************
REM Load scroll feature on quarter VGA system.
REM ************************************************************
C:\CTC\PACTRL -T -S
IF ERRORLEVEL 3 LH C:\CTC\SCROLL
REM ************************************************************
REM Call AUTOEXEC.BAT file contained in project, if it exists.
REM ************************************************************
IF NOT EXIST C:\STARTUP\NUL.EXT MD C:\STARTUP
CD \STARTUP
IF EXIST C:\STARTUP\AUTOEXEC.BAT CALL C:\STARTUP\AUTOEXEC.BAT
REM ************************************************************
REM Start the MachineShop Shell.
```

```
REM ************************************************************
CD \CTC
PSU
GOTO END
:ERROR
CLS
ECHO.
ECHO This CompactFlash is programmed
ECHO for a PA PowerStation and is not
ECHO compatible with this system.
ECHO.
ECHO The startup process has been
ECHO halted.
ECHO.
:END
```